MTS-FFV3M

1:10 ELECTRONIC FRONT WHEEL PRO CAR KIT
(MID MOTOR)

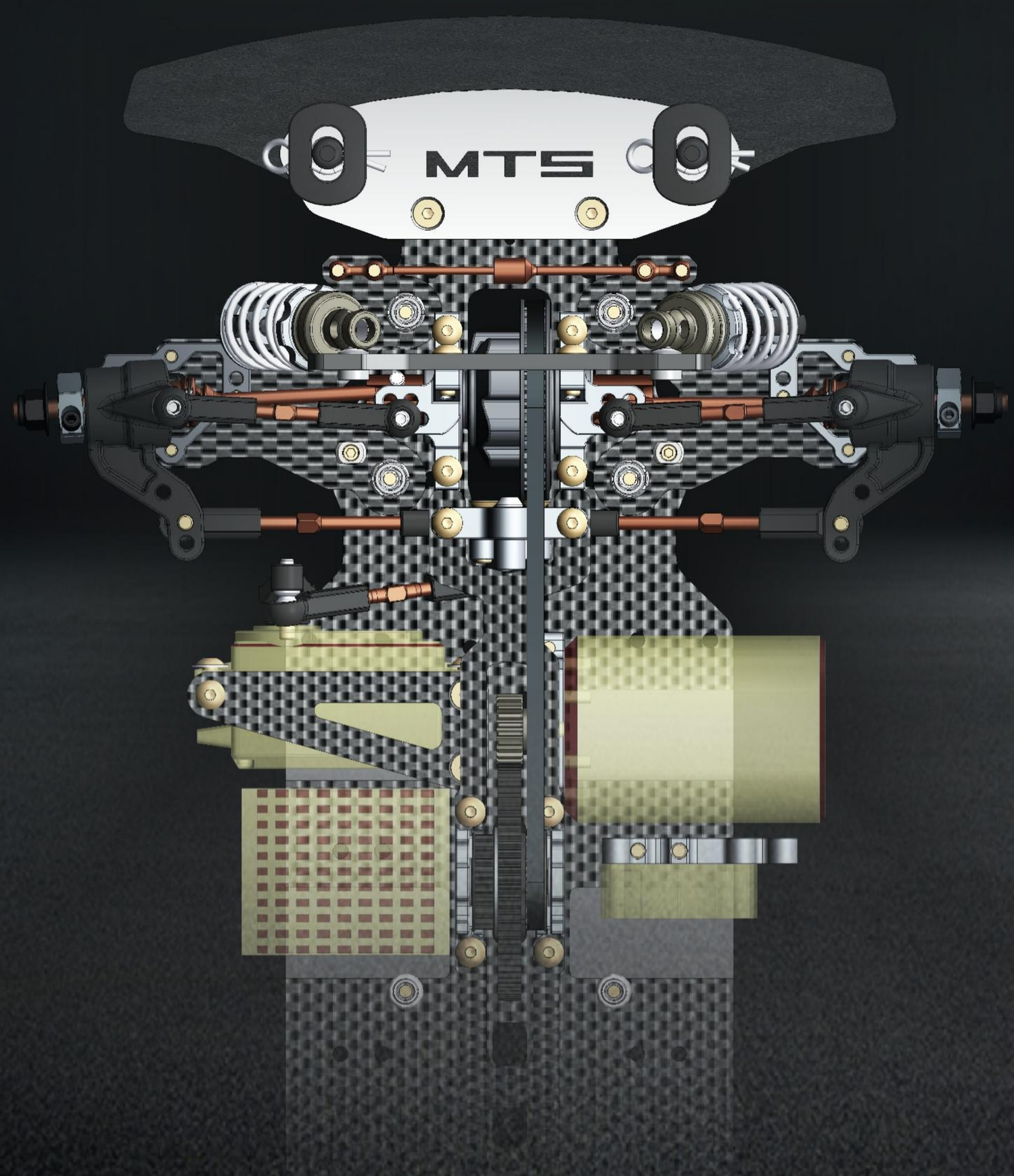

Introduction:

FFV3M Pro is a professional 1:10th front wheel drive car and should be built by aged 14 years or over or that they had experience building and operating R/C model cars before. This is not a toy intended for use by beginners or by children without any supervision of a knowledgeable adult. Please read the instruction manual carefully before building.

Race opt should not be liable for any loss, injury or damages, whether direct, indirect, special, incidental, consequential, arising from the use, misuse, abuse of this product or accessories required to operate this product.

Warnings:

◎ This product is not intended for those ages under 14 year without any adult supervision.

◎ Assemble this kit only in places away from the reach of children.

◎ Exercise car when using tools and sharp instrument and take care some parts that may have sharp edges when building.

◎ Please do not touch any electronic equipment on the model such as motor and speed controller that having higher temperatures after the operation. Otherwise, it may burn yourself seriously by touching them. Better to allow 10~15 minutes to let any electronic equipment cool down.

◎ Please complete a successful pre-run check of your radio equipment and model before the run. Make sure to keep the wheels of the model off the ground when checking the operation of the radio equipment.

◎ When on the model, please always turn on the transmitter before turn on the receiver in the car. When off the model, please always turn off the receiver before turn off the transmitter. Otherwise, the model may become uncontrollable and cause serious damage.

◎ Disconnect the battery pack before storing your model.

◎ Do not get overcharge for the battery or leave battery unattended while charging. Never let children charge the battery without adult supervision.

◎ Do not operate it on public places, roads or areas where its operation can conflict with or disrupt pedestrian or vehicular traffic.

◎ Do not use your model as shown below:

In places where children and people gather	In rain, wind snow or darkness condition
In areas where loud noises can disturb others	At anytime your line of sight to the model may be obstructed or impaired in any way

Electrical Precautions:

◎ Please do not allow any metal part to short circuit the battery or any electronic part using inside the car kit.

◎ Never put batteries into fire.

◎ Use the recommended charger for the transmitter battery and battery for electronic speed control. Please follow the charging instructions carefully. Please do not over charge the battery or choose the wrong charging mode.It becomes dangerous that causes the explosion and lead to the fire. If battery becomes extremely hot during the charging, please seek the advice from or get replacement from the corresponding battery supplier.

◎ Please unplug charger when not in use.

◎ When not using RC model, please always disconnect and remove the battery.

◎ Low battery may result in loss of control. Please stop running the car at once when you find its speed start to slow down.

◎ After use the battery, the battery remains heat and please recharges it after the battery is cool down.

◎ Never use damaged wires that are dangerous and cause short circuits and may lead to the fire.

Other Equipment Needed (not included):

Radio transmitter & receiver	Battery for transmitter
Electronic speed control	Steering Servo
540 Type brushes or brushless motor	Pinion Gear (48pitch/64pitch)
190mm body shell	7.4V Nimh or Lipo Battery
Touring Car Tire set	Battery charger

Tools Needed (not included):

1.5mm, 2.0mm, 2.5mm allen wrench	5.0mm, 5.5mm, 7.0mm hex socket wrench
Modelers craft knife	Turnbuckle wrench
Calipers/Ruler	Camber gauge
Instant glue/Thread lock glue	Shock and Diff Oil
Thrust, Diff and Joint grease	Paint for body shell

Notes: All replacement parts can be found from www.race-opt.com/www.sn-rc.com and can be purchased from local hobby shop. If any further information needed, please email to enquiry@rc-explorer.com.

MTS-FFV3M

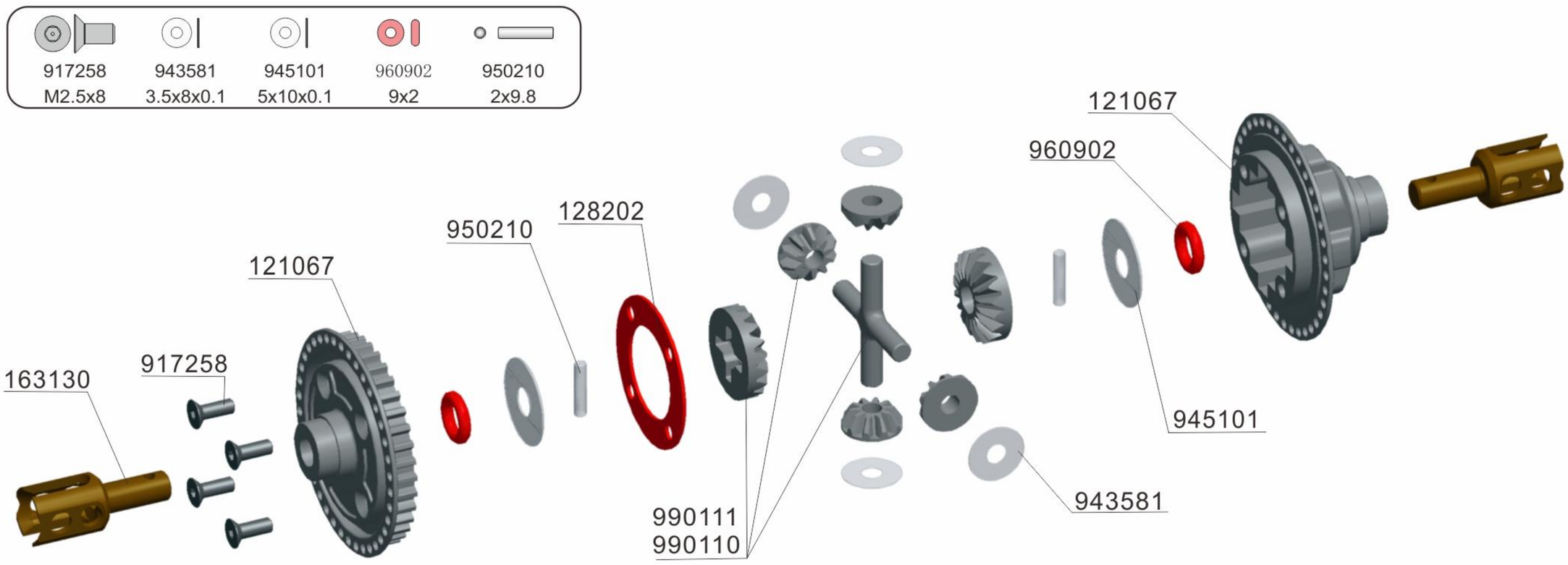

990110 PLANETARY GEAR SET-PLASTIC
990111 PLANETARY GEAR SET-HARD COATED

163130 UNIVERSAL CVD DRIVE SHAFT-SPRING STEEL10x3.1 S2
121067 COMPOSITE GEAR DIFF. CASE & COVE
128202 DIFF GASKET26MM

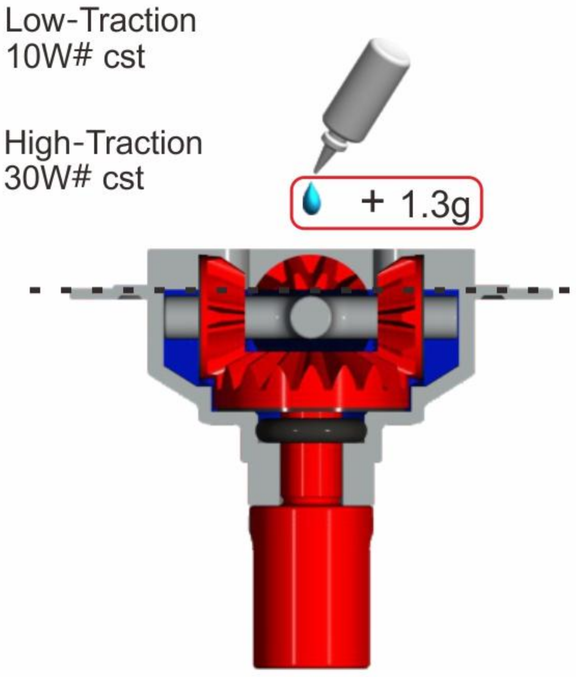

Add 1.3g of oil the diff.

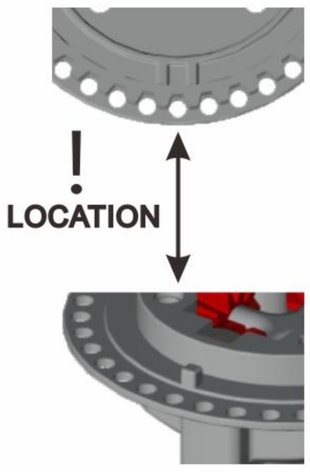

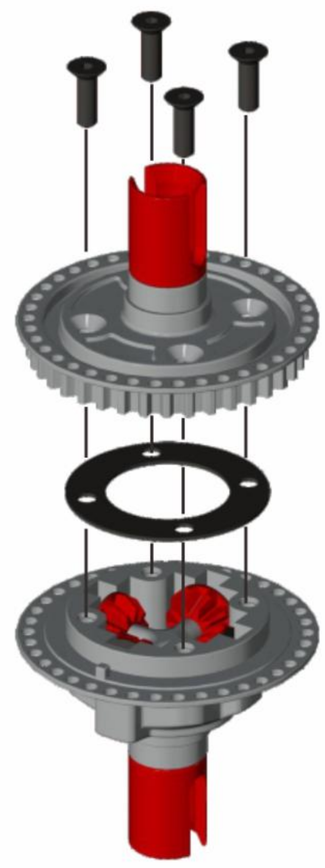

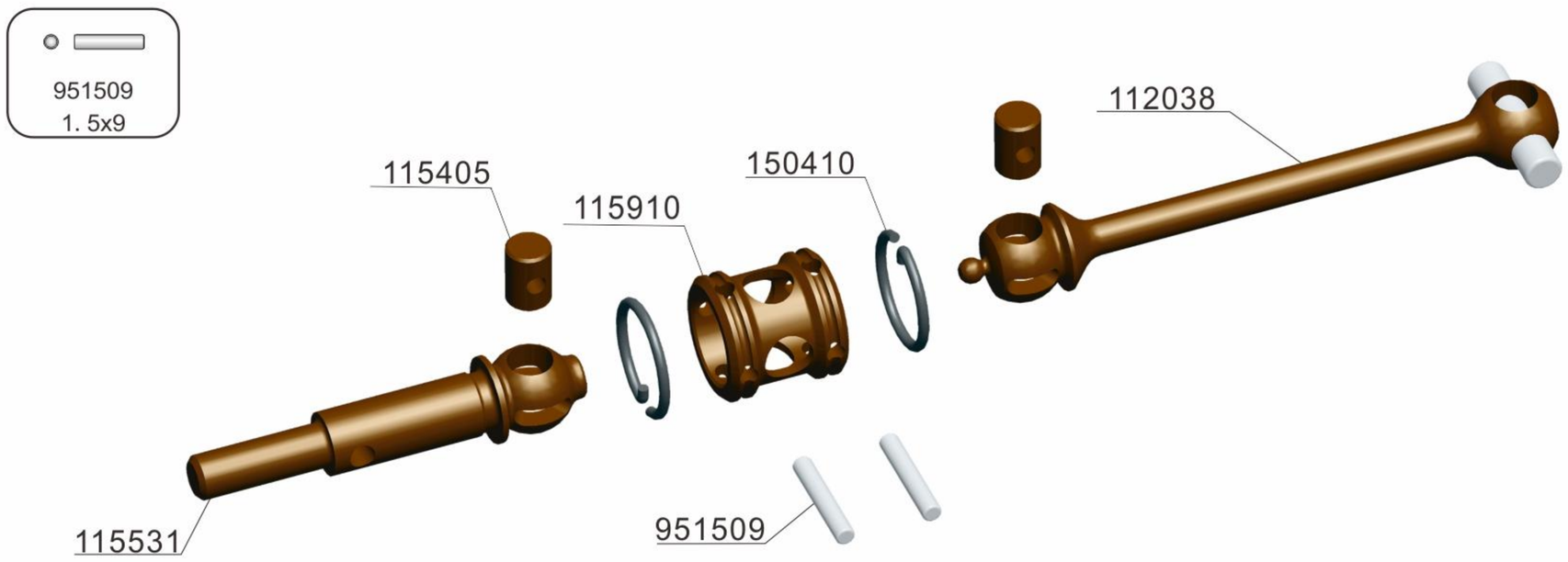

115531 THREE SECTION UNIVERSAL DRIVE SHAFT AXLE S2
115405 THREE SECTION UNIVERSAL DRIVE SHAFT CROSS JOINT
112038 38MM THREE SECTION UNIVERSAL DRIVE SHAFT 3MM PIN-S2
115910 THREE SECTION UNIVERSAL DRIVE SHAFT JOINT HOUSING S2
150410 THREE SECTION UNIVERSAL DRIVE SHAFT JOINT HOUSING C-CLIP

MTS-FFV3M

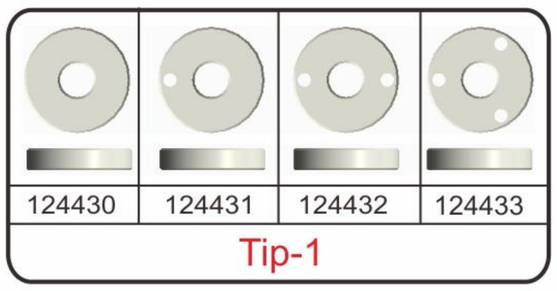

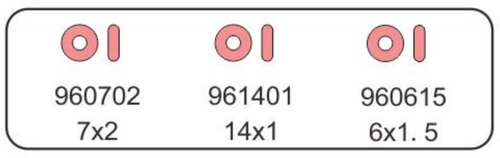

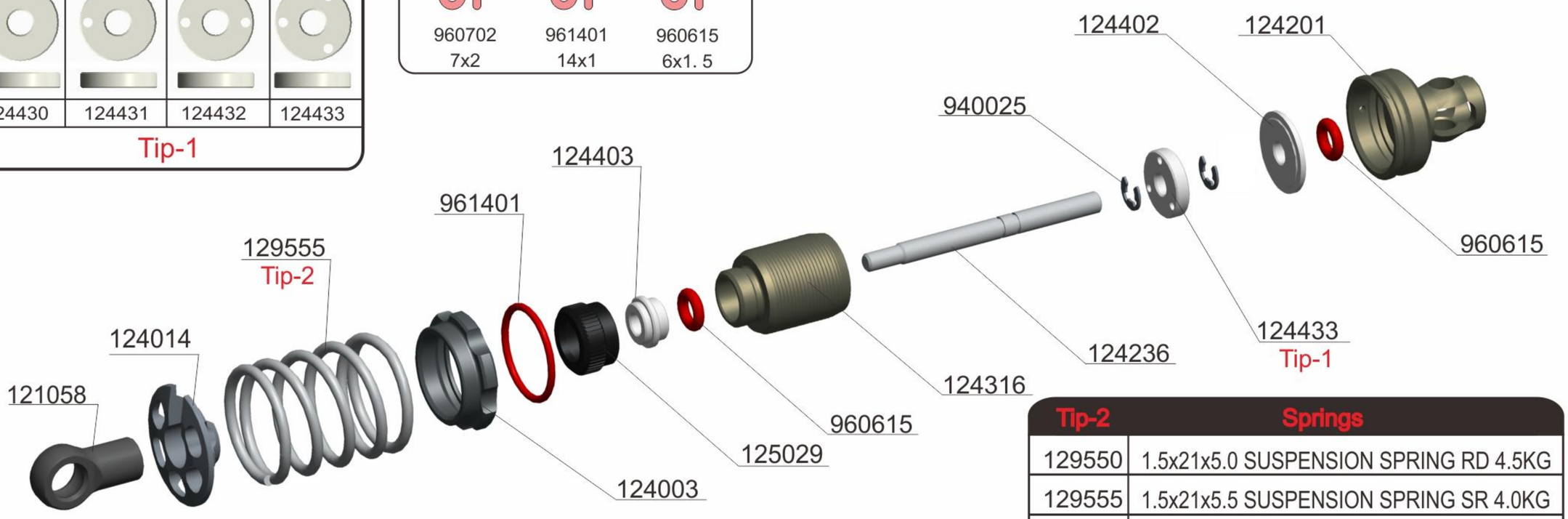

Tip-2	Springs
129550	1.5x21x5.0 SUSPENSION SPRING RD 4.5KG
129555	1.5x21x5.5 SUSPENSION SPRING SR 4.0KG
129560	1.5x21x6.0 SUSPENSION SPRING YE 3.5KG
129565	1.5x21x6.5 SUSPENSION SPRING BL 3.0KG

121058 SHOCK BALL JOINT
124014 ALU.SHOCK SPRING RETAINING COLLAR LOW GRAVITY -3.0mm
124003 SUSPENSION SPRING RETAINER-12MM
125029 ALU SHOCK BOTTOM CAP
124403 RAS-SHOCK BOTTOM COVER

124201 RAS- SHOCK CAP
124402 RAS-SHOCK TOP COVER
124236 RAS-SHOCK SHAFT 3X36MM
124316 RAS-SHOCK BODY 12X16MM
124433 RAS-SHOCK PISTON (3 HOLE)

Low-Traction
500 cst

High-Traction
1000 cst

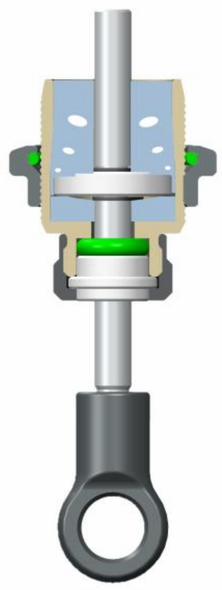

3~5
UP & DOWN

Move the shock shaft up and down a few times to release the air bubbles trapped beneath the piston.

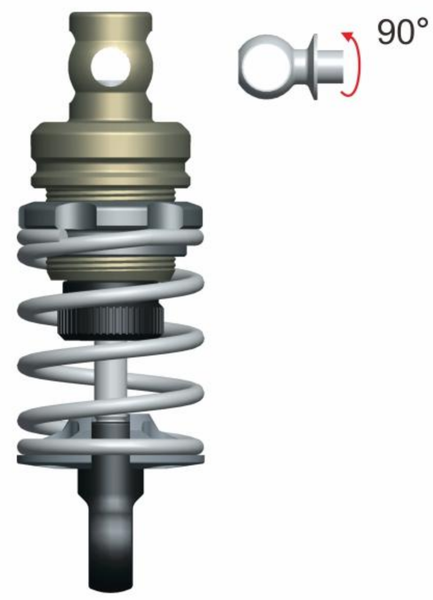

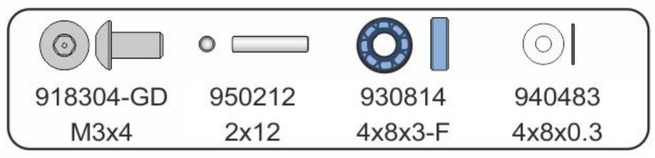

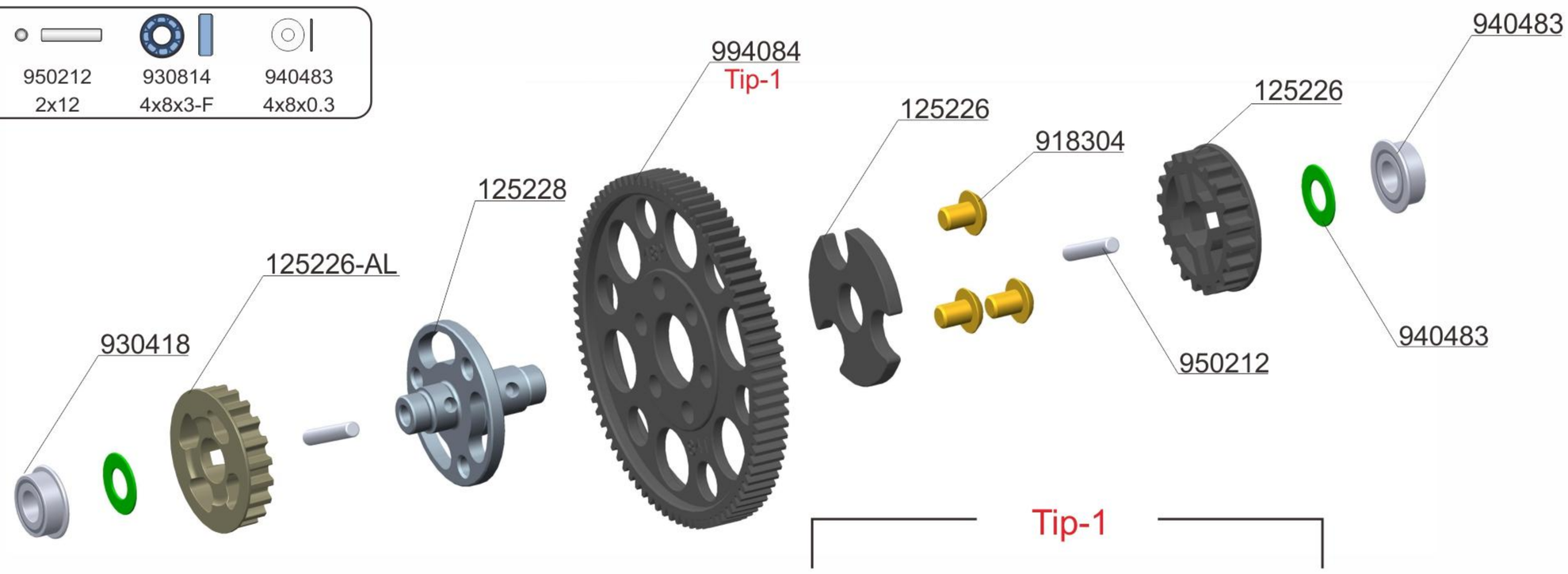

994084 SPUR GEAR 84T / 48P
125226 20T FIXED PULLEY (NARROW)
125228 ALU. SOLID LAYSHAFT (NARROW)4.0

Tip-1

48P	
994084	SPUR GEAR 84T/48P
994084-WH	SPUR GEAR 84T/48P
994087	SPUR GEAR 84T/48P
994087-WH	SPUR GEAR 87T/48P

64P	
996110	SPUR GEAR 110T/64P
996110-WH	SPUR GEAR 116T/64P
996116	SPUR GEAR 110T/64P
996116-WH	SPUR GEAR 116T/64P

MTS-FFV3M

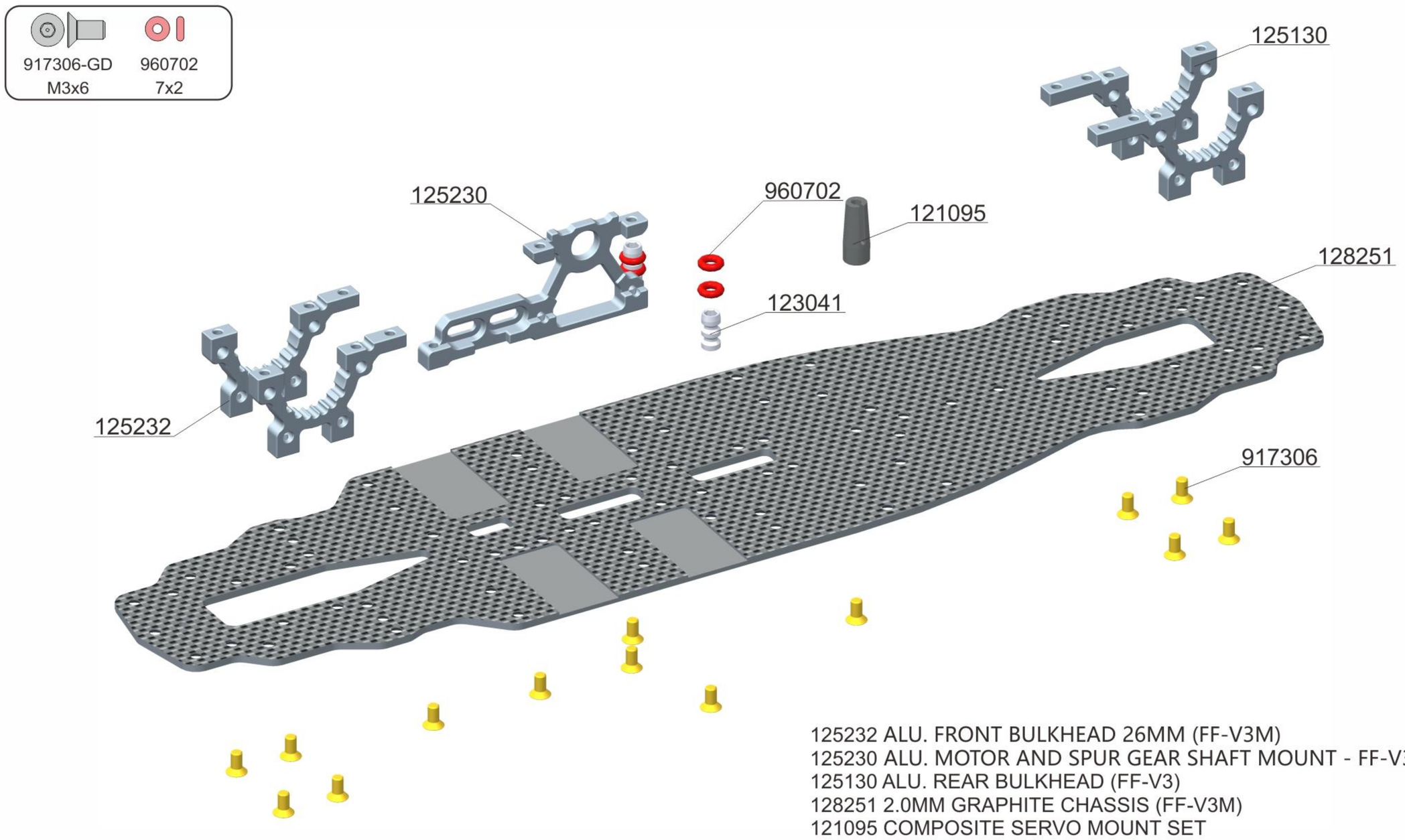

125232 ALU. FRONT BULKHEAD 26MM (FF-V3M)
125230 ALU. MOTOR AND SPUR GEAR SHAFT MOUNT - FF-V3M
125130 ALU. REAR BULKHEAD (FF-V3)
128251 2.0MM GRAPHITE CHASSIS (FF-V3M)
121095 COMPOSITE SERVO MOUNT SET
123041 BATTERY FIXING COLUMN POST

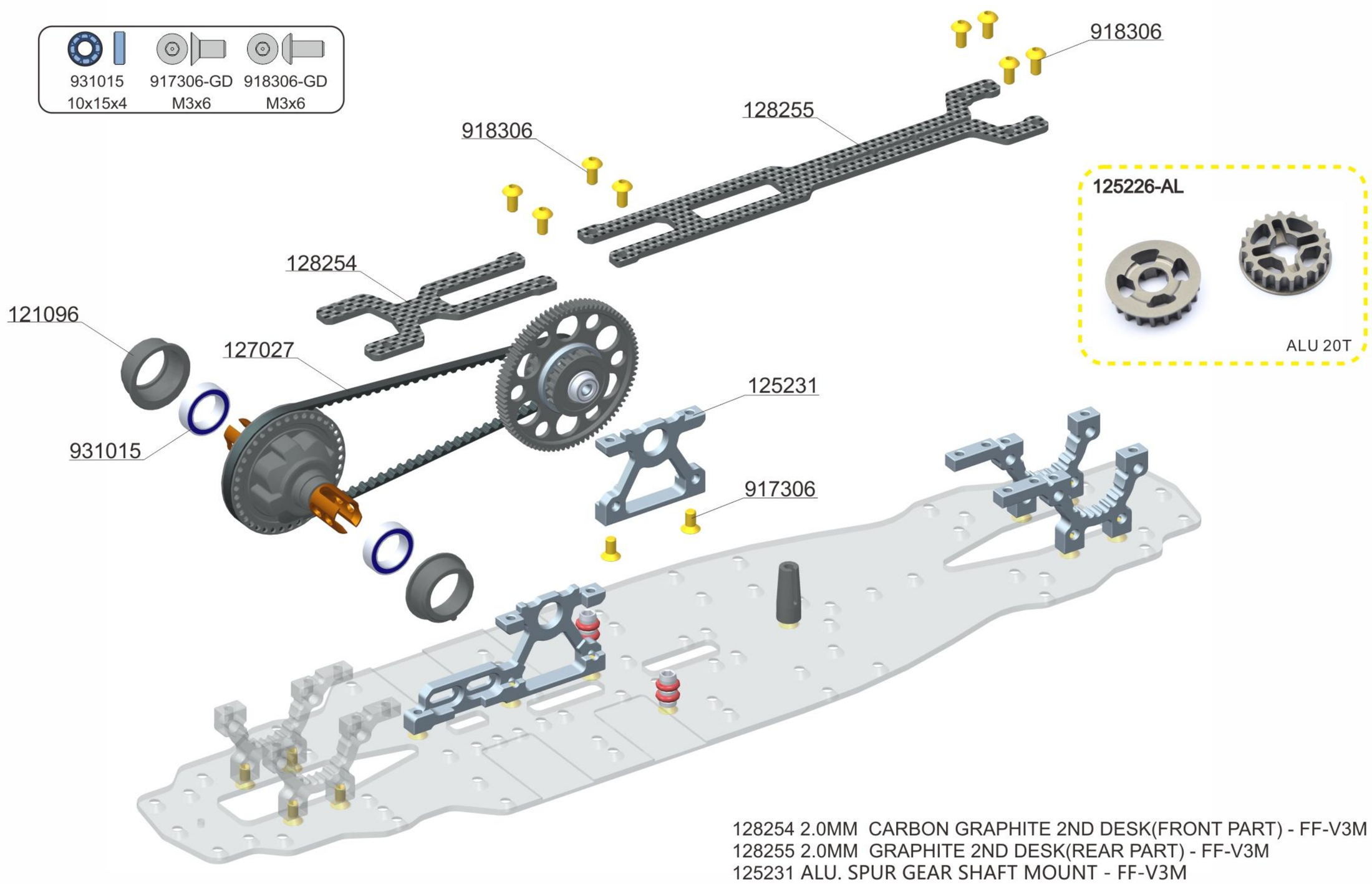

128254 2.0MM CARBON GRAPHITE 2ND DESK(FRONT PART) - FF-V3M
128255 2.0MM GRAPHITE 2ND DESK(REAR PART) - FF-V3M
125231 ALU. SPUR GEAR SHAFT MOUNT - FF-V3M
121096 COMPOSITE ADJUSTMENT BALL-BEARING HUB
127027 SYNCHRONOUS BELT SHORT-273 91T

MTS-FFV3M

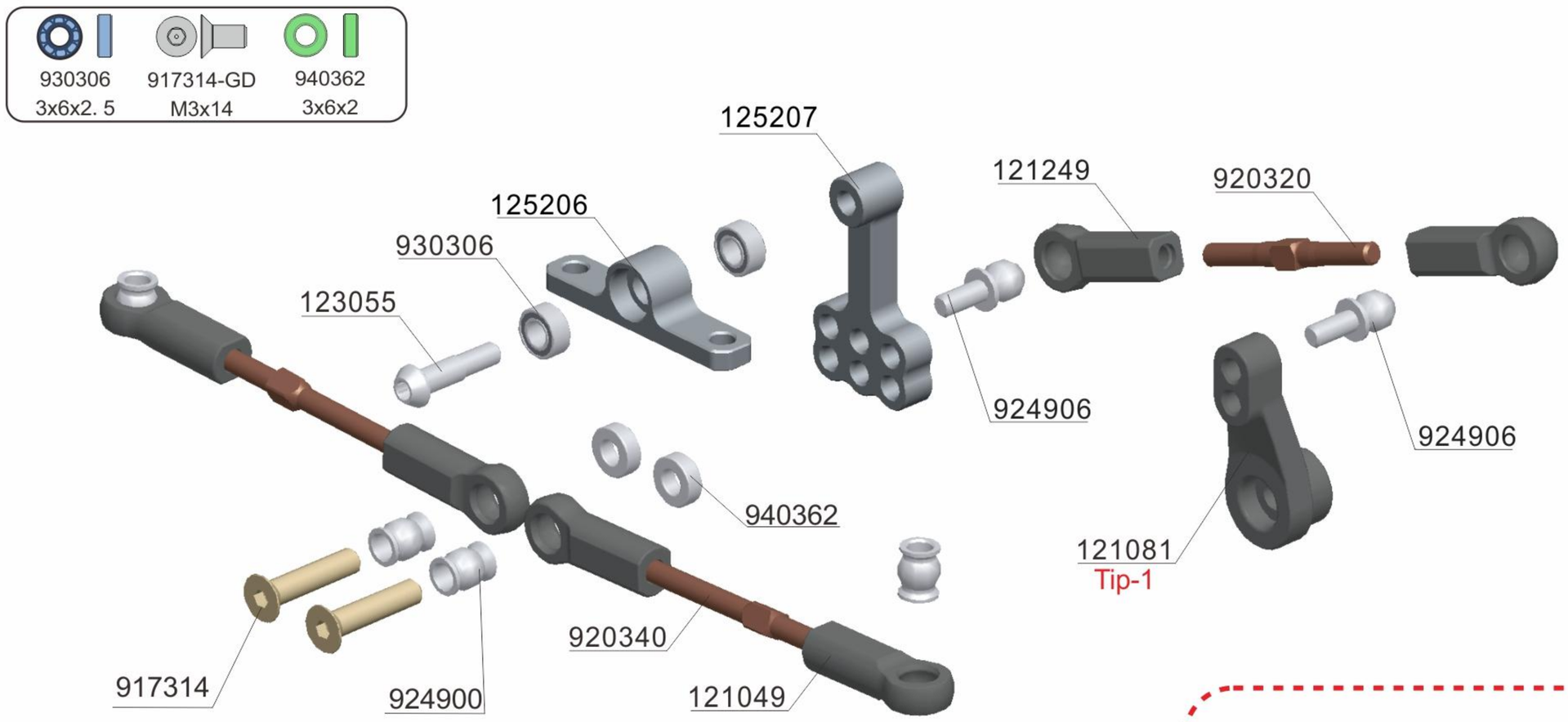

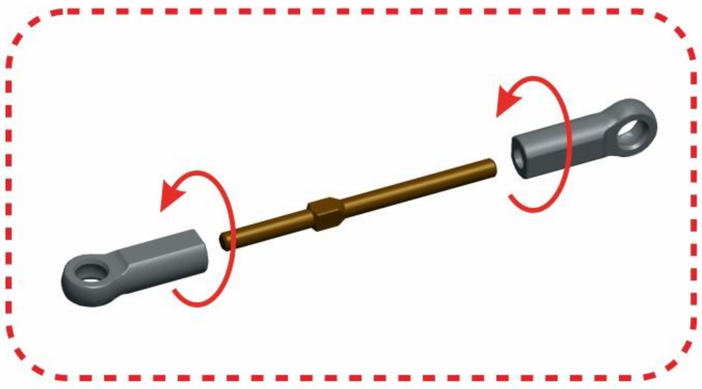

Tip-1	Servo Arm
121081	Servo Arm-J (JR,KO)
121081	Servo Arm-F (Futaba)

123055 SPRING STEEL STEERING SHAFT
125206 ALU. STEERING MOUNT HOLDER
125207 ALU. STEERING PLATE
121249 COMPOSITE BALL JOINT 4.9MM - CLOSED WITH HOLE
121081 COMPOSITE SERVO HORN
121049 COMPOSITE BALL JOINT 4.9MM - OPEN
920320 ADJ. TURNBUCKLE L/R 20 MM - SPRING STEEL

924900 PIVOT BALL4.9x6mm DOUBLE BEVEL SHOULDERS
920340 ADJ. TURNBUCKLE L/R 40mm - SPRING STEEL
930306 BALL-BEARING 3x6x2.5
924906 BALL END 4.9mm WITH THREAD 6mm H2.0

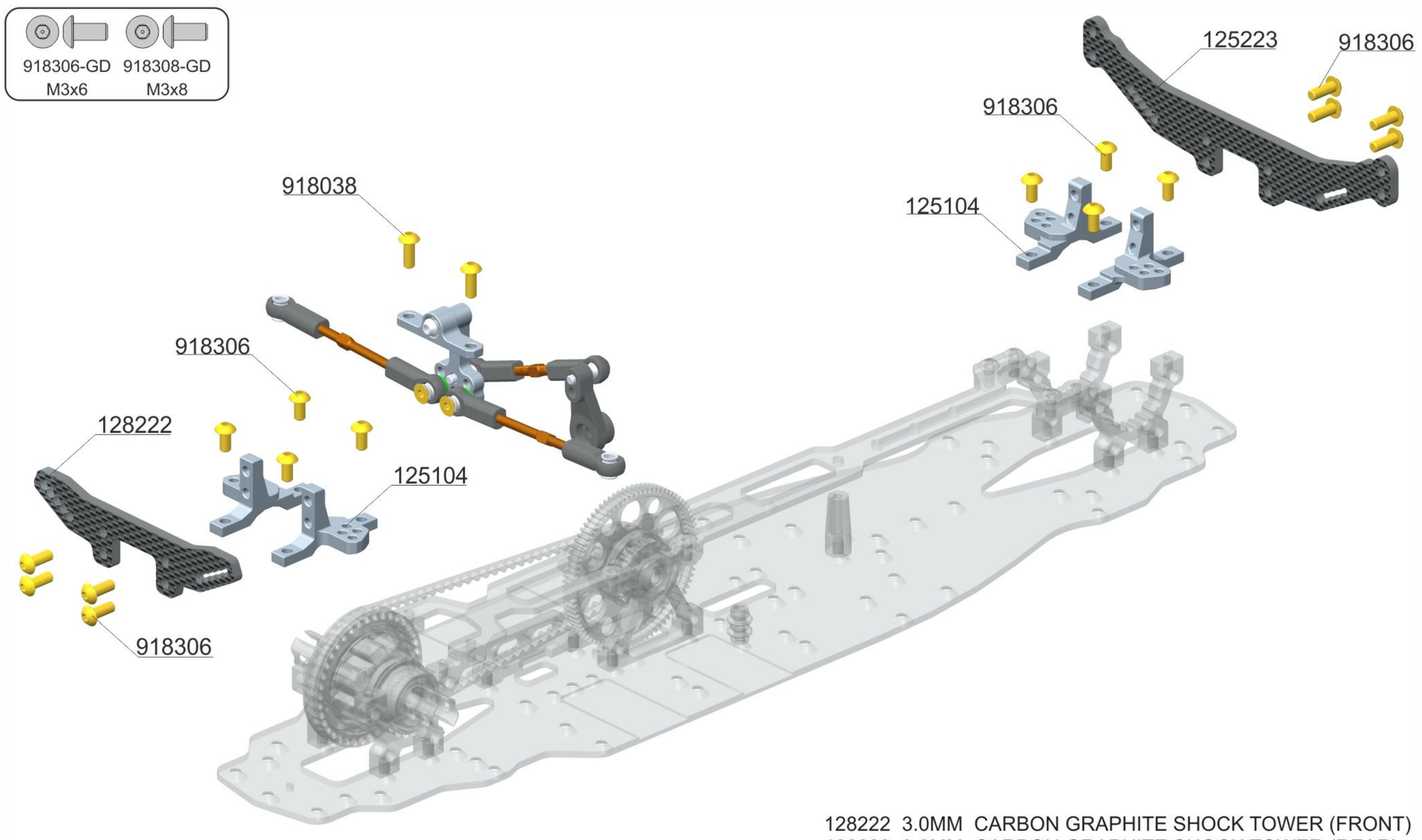

128222 3.0MM CARBON GRAPHITE SHOCK TOWER (FRONT)
128223 3.0MM CARBON GRAPHITE SHOCK TOWER (REAR)
125104 REAR BEARING SLEEVE CLAMP (L+R)

MTS-FFV3M

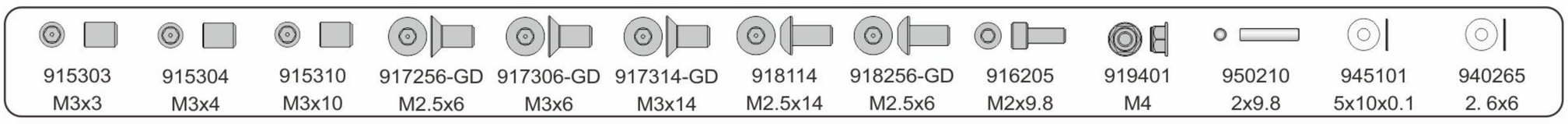

125451 ALU. FRONT ARM JOINT HOLDER - L
125452 ALU. FRONT ARM JOINT HOLDER - R
125453 ALU. REAR ARM JOINT HOLDER - L
125454 ALU. REAR ARM JOINT HOLDER - R
128166 2.0MM GRAPHITE FRONT ARM - L
128167 2.0MM GRAPHITE FRONT ARM - R
128168 2.0MM GRAPHITE REAR ARM - L
128169 2.0MM GRAPHITE REAR ARM - R

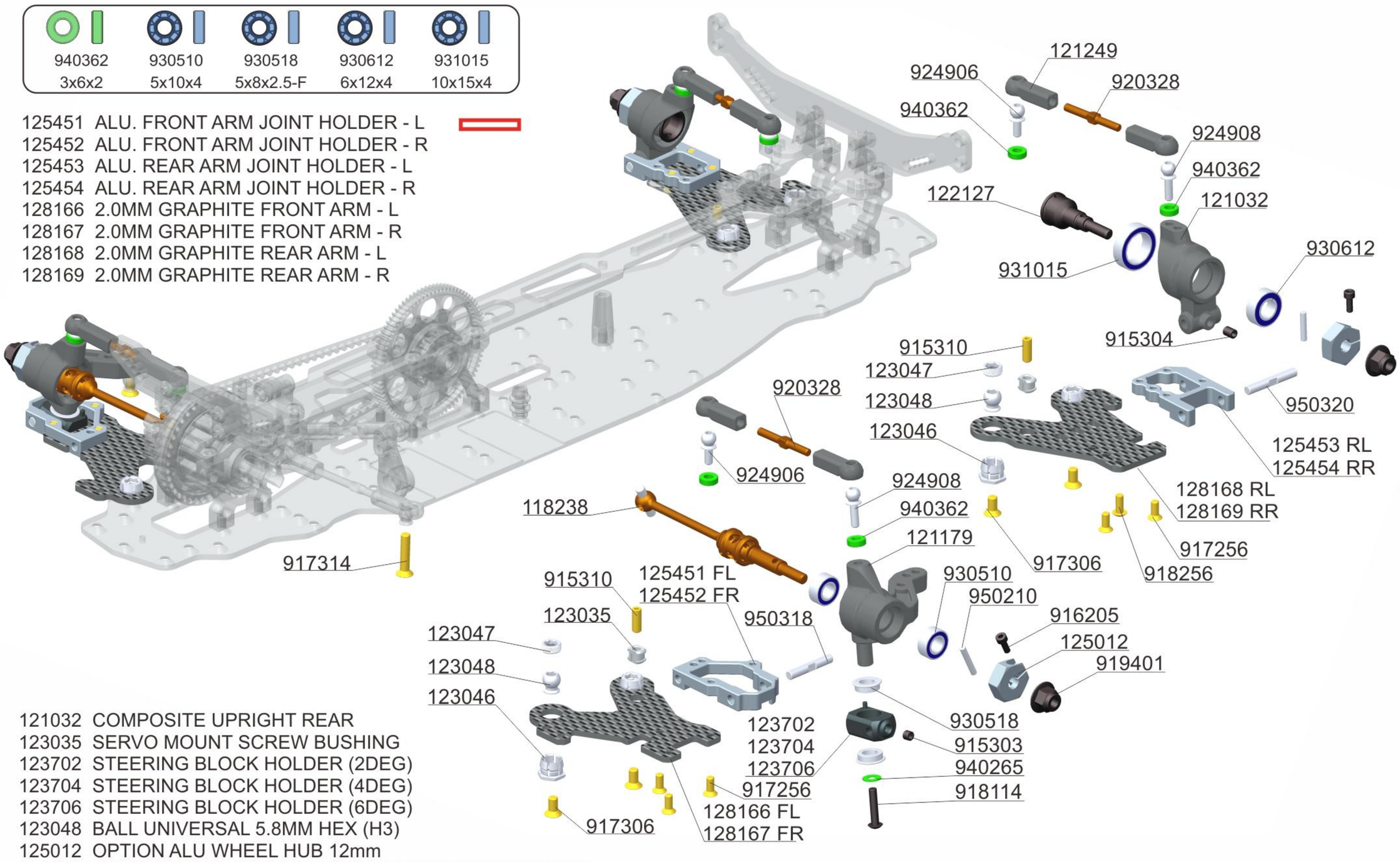

121032 COMPOSITE UPRIGHT REAR
123035 SERVO MOUNT SCREW BUSHING
123702 STEERING BLOCK HOLDER (2DEG)
123704 STEERING BLOCK HOLDER (4DEG)
123706 STEERING BLOCK HOLDER (6DEG)
123048 BALL UNIVERSAL 5.8MM HEX (H3)
125012 OPTION ALU WHEEL HUB 12mm
121179 TURNTHE CUP AROUND8°.THREE SECTIONSTICKUSE
121249 COMPOSITE BALL JOINT 4.9MM - CLOSED WITH HOLE
123046 SUSPENSION ARM BALL JOINT HOLDER
123047 SUSPENSION ARM BALL JOINT HEX NUT M6.5
118238 THREE SECTION OF ROD CVD UNIVERSAL JOINT (SPRING STEEL)- 38MM 3MM PIN
120146 RIGHT ANGLE CVD DRIVE SHAFT SPRING STEEL-46mm 2.0PIN -S2

920324 ADJ. TURNBUCKLE L/R 24 mm - SPRING STEEL
950318 FRONT PIVOT PIN FOR C-HUB 3x18
950320 REAR UPRIGHT PIVOT PIN 3x20mm
924906 BALL END 4.9mm WITH THREAD 6mm H2.0
924908 BALL END 4.9mm WITH THREAD 8mm H2.0
122127 CVD AXLE SHAFT- RIGHT ANGLE

Tip-1	
123112	1.2
123114	1.4
123116	1.6
123118	1.8
123120	2.0

Tip-2	
123012	1.2
123014	1.4
123016	1.6
123018	1.8
123020	2.0

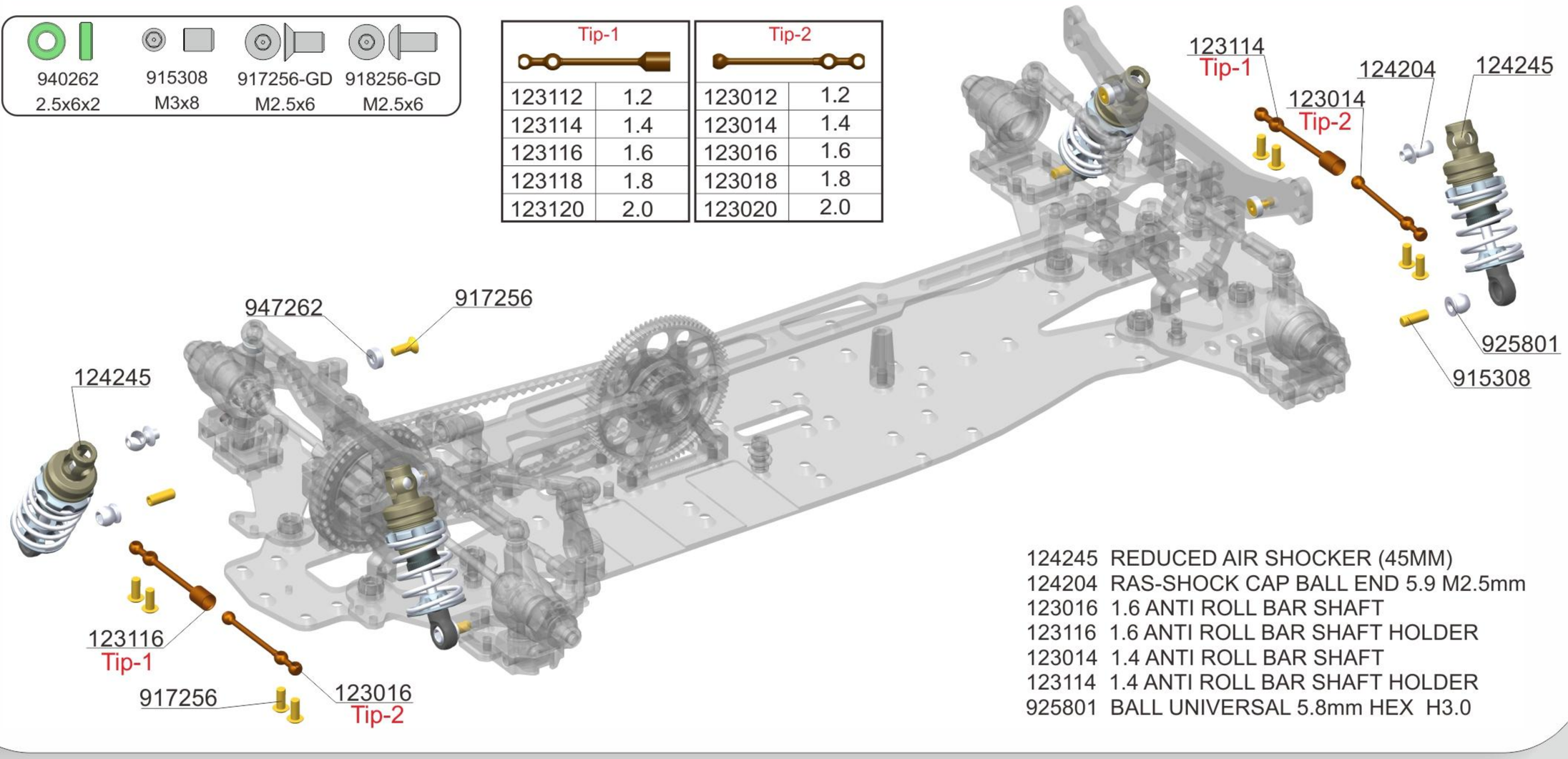

124245 REDUCED AIR SHOCKER (45MM)
124204 RAS-SHOCK CAP BALL END 5.9 M2.5mm
123016 1.6 ANTI ROLL BAR SHAFT
123116 1.6 ANTI ROLL BAR SHAFT HOLDER
123014 1.4 ANTI ROLL BAR SHAFT
123114 1.4 ANTI ROLL BAR SHAFT HOLDER
925801 BALL UNIVERSAL 5.8mm HEX H3.0

MTS-FFV3M

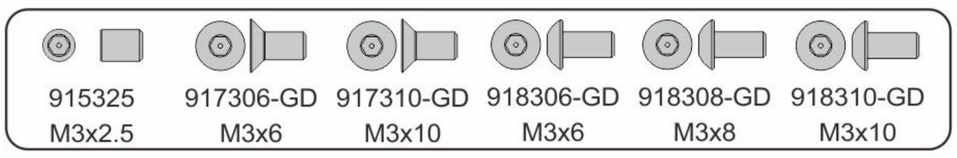

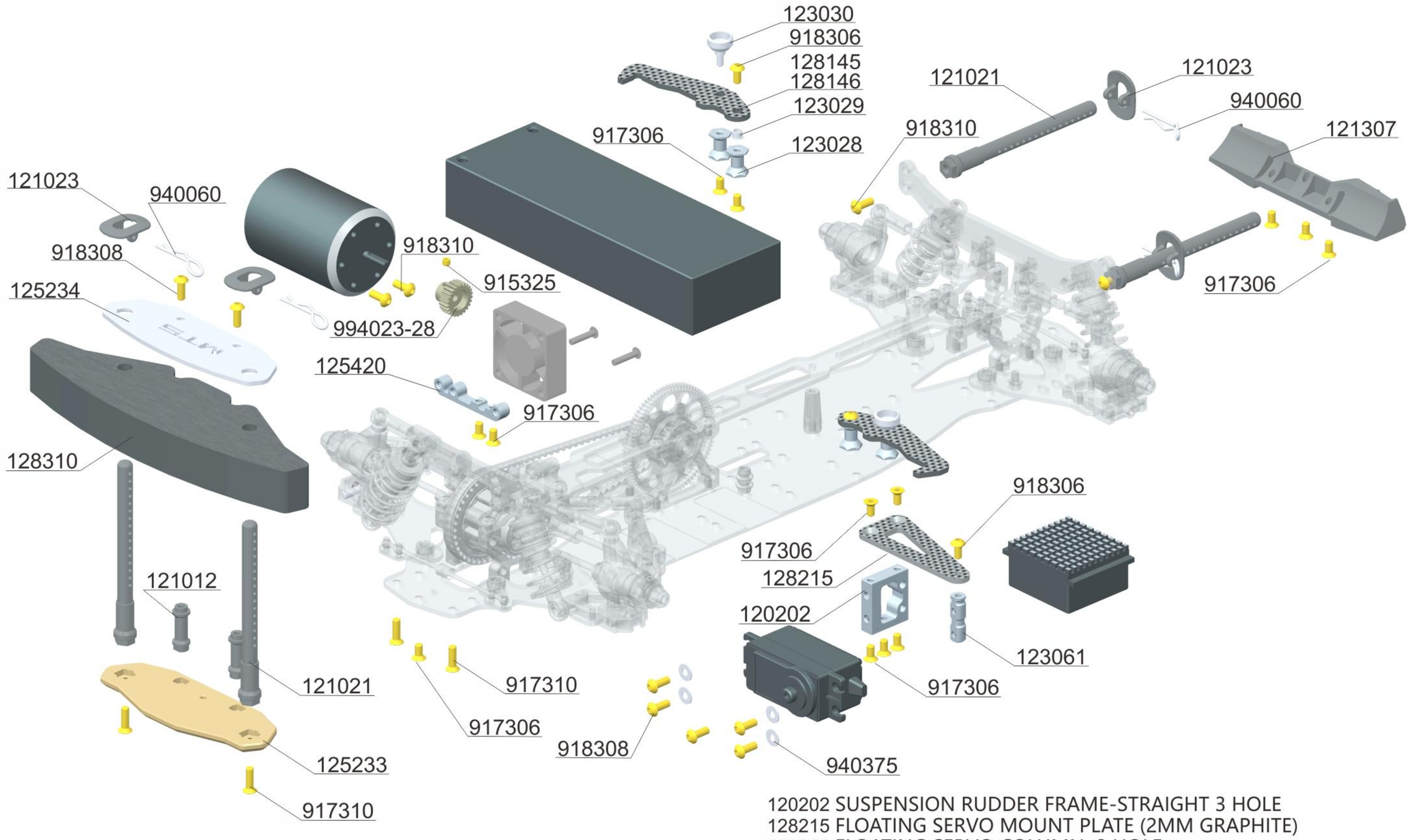

125233 FRONT ANTI-COLLISION COUNTERWEIGHT - BRASS
125234 FRONT ANTI-COLLISION TOP PLATE-STEEL
128310 REAR DRIVE FRONT ANTI-COLLISION SPONGE - 45 °
121012 COMPOSITE UPPER HOLDER FOR BUMPER
121021 FRONT BODY MOUNT SET
940060 BODY CLIP 6mm
994023-28 PINION GEAR ALU HARD COATED 48P / 23-28T

120202 SUSPENSION RUDDER FRAME-STRAIGHT 3 HOLE
128215 FLOATING SERVO MOUNT PLATE (2MM GRAPHITE)
123061 FLOATING SERVO COLUMN 2 HOLE
123030 BATTERY MOUNT HANDLER
128145 BATTERY HOLDER PLATE 96 (GRAPHITE, FF-V3)
128146 BATTERY HOLDER PLATE 139 (GRAPHITE, FF-V3)
123029 BATTERY MOUNT SCREW BUSHING
123028 ALU.BATTERY STANDOFF POST
121307 COMPOSITE REAR BUMPER
125420 30-40mm FAN MOUNT

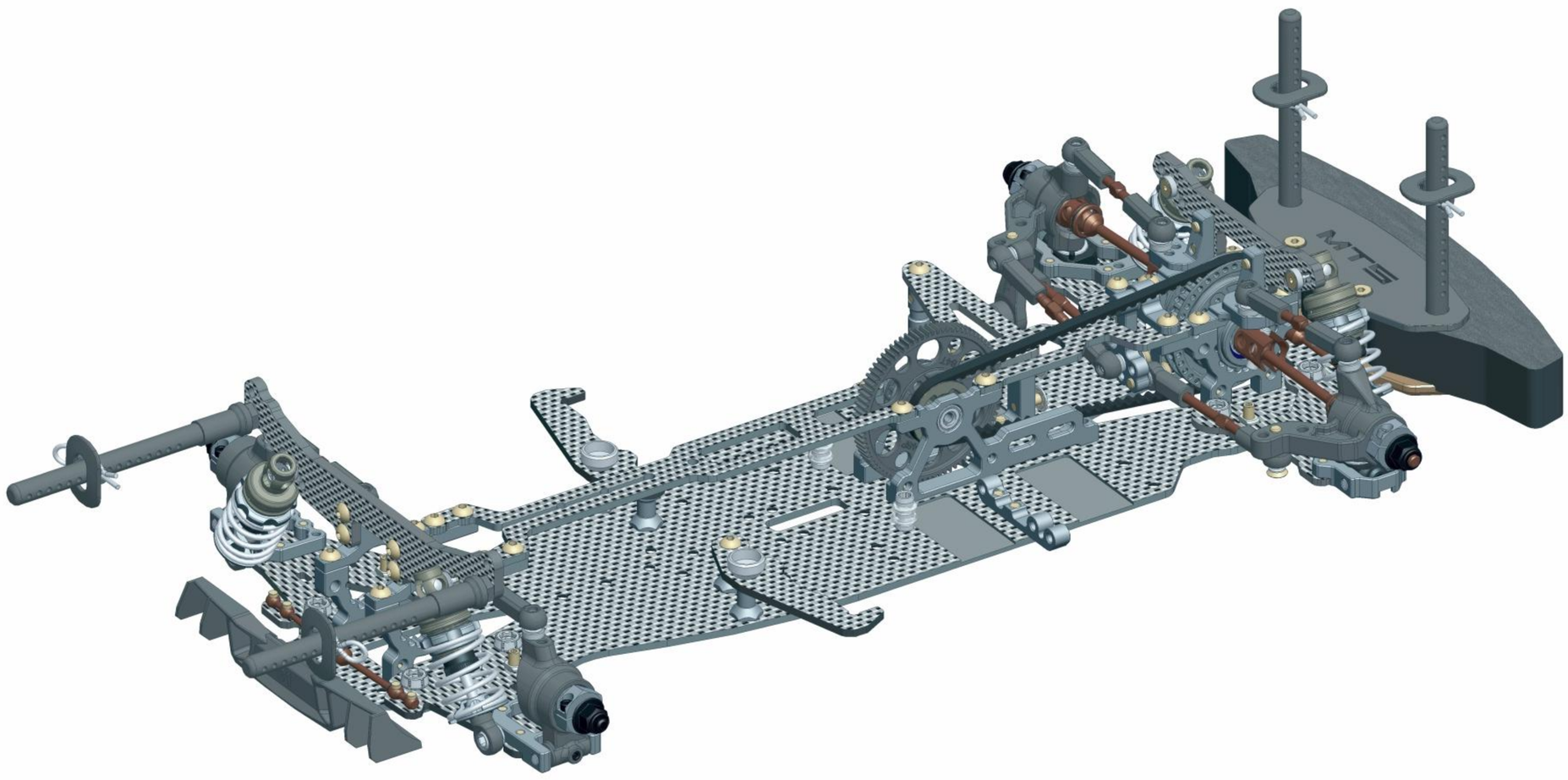

MTS-FFV3M

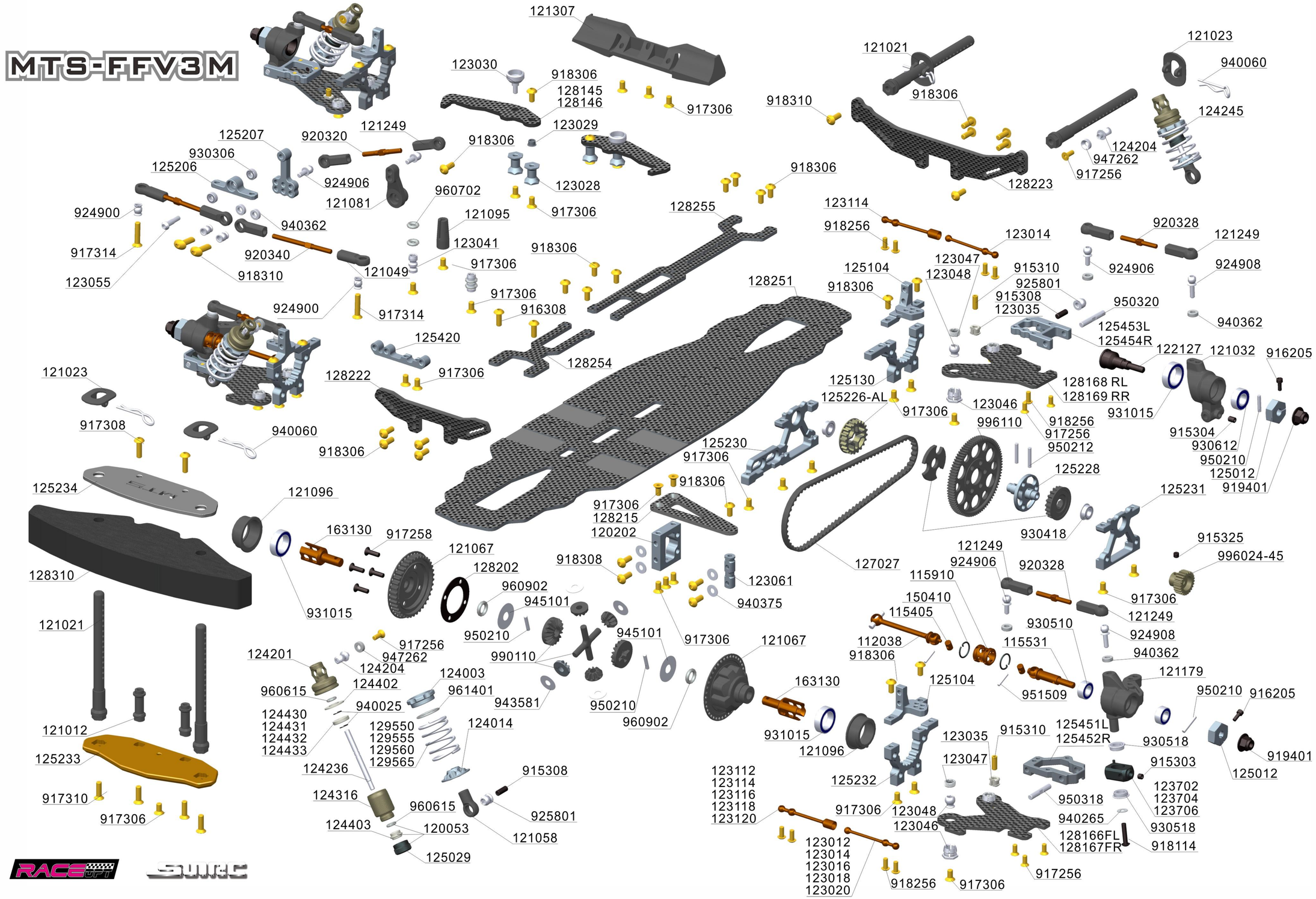

STANDARD	OPTION PART
123014 1.4mm ANTI ROLL BAR	123012 1.2mm, 123014 1.4mm, 123016 1.6mm, 123018 1.8mm, 123020 2.0mm, 123022 2.2mm
	123221 1.4/1.6/1.8mm
123114 1.4mm ANTI ROLL BAR	123112 1.2mm, 123114 1.4mm, 123116 1.6mm, 123118 1.8mm, 123120 2.0mm, 123122 2.2mm
	123222 1.4/1.6/1.8mm
123014 / 123114 1.4mm ANTI ROLL BAR	123223 1.4/1.6/1.8mm
129555 1.5x21x5.5 SR4.0KG	129550 1.5x21x5.0 4.5KG, 129555 1.5x21x5.5 4.0KG, 129560 1.5x21x6.0 3.5KG, 129565 1.5x21x6.5 3.0KG

STANDARD	124014 ALU -3mm		123704 H10 4°		990110 PLASTIC		112038 38mm 3.0PIN S2		
OPTION PART	124012 ALU	124013 ALU -1mm	123702 H10 2°	123706 H10 6°	990111 ALU	990112 STEEL	112037 38mm 2.0PIN	121099 2.0PIN CVD	123011 SPRING STEEL10x3.6 S2

STANDARD	161113 PLASTIC SET S2 CUP 3.1				163130 SPRING STEEL10x3.1		125012 H12x5
OPTION PART	161112 ALU GEAR S2 CUP 3.1	161114 STEEL S2 CUP 3.1	121114 PLASTIC GEAR S2 CUP 3.6	121113 ALU GEAR S2 CUP 3.6	127127 FIBRE 91T	127227 PU KEVLAR 91T	125012-1 H12x5+1mm 125012-2 H12x5+2mm 125012-3 H12x5+3mm 125012-4 H12x5+4mm

1/10 ELECTRIC TOURING CAR

112038 38MM
112040 40MM

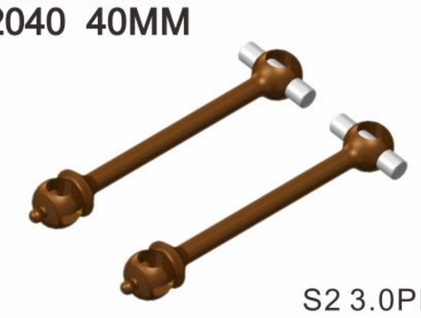

S2 3.0PIN

UNIVERSAL DRIVE SHAFT(S2)

112037 38MM
112039 40MM

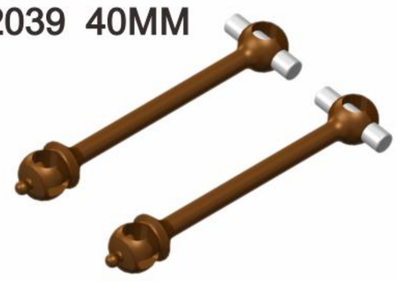

S2 2.0OIN

UNIVERSAL DRIVE SHAFT(S2)

115910

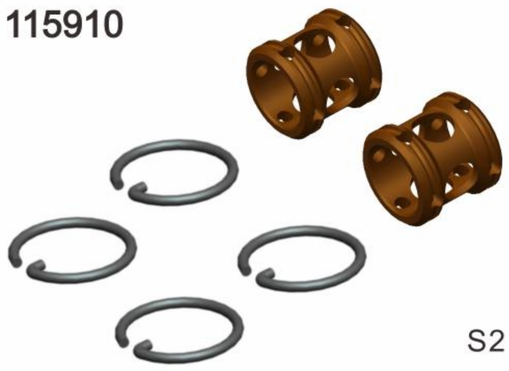

S2

DRIVE SHAFT JOINT HOUSING

115531

S2

DRIVE SHAFT AXLE

115405

S2

DRIVE SHAFT CROSS JOINT

150410

DRIVE SHAFT JOINT HOUSING C-CLIP

118238 38MM
118240 40MM

S2 3.0PIN

DRIVE SHAFT COMPLETE SET

118237 38MM
118239 40MM

S2 2.0PIN

DRIVE SHAFT COMPLETE SET

124245 12x45MM
124249 12x49MM
124257 12x57MM

REDUCED AIR SHOCKER

160345

13mm

SHORTER SHAFT ABSORBER

124236 3x36MM
124239 3x40MM
124247 3x48MM

RAS-SHOCK SHAFT

124316 12x16MM
124318 12x18MM
124322 12x22MM

RAS-SHOCK BODY

121058

5.8x15.5mm

SHOCK BALL JOINT

124003

12mm

SUSPENSION SPRING RETAINER

125029

ALU M8

SHOCK BOTTOM CAP(COMPLETE SET)

120053

3.0x3.7 M8

SHOCK BUTTOM CAP SET WITH ORING

124403

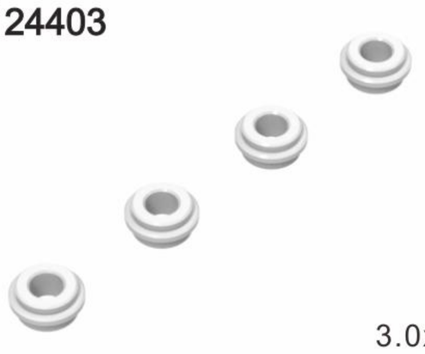

3.0x3.7

RAS-SHOCK BOTTOM COVER

124201

RAS - SHOCK CAP

124430

0-HOLE

RAS-SHOCK PISTON

124431

1-HOLE

RAS-SHOCK PISTON

124432

2-HOLE

RAS-SHOCK PISTON

124433

3-HOLE

RAS-SHOCK PISTON

124012

ALU

SHOCK SPRING RETAINING COLLAR

124013 -1MM
124014 -3MM

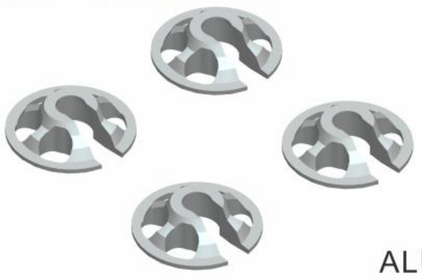

ALU

SHOCK SPRING RETAINING COLLAR

1/10 ELECTRIC TOURING CAR

124402

RAS-SHOCK TOP COVER

124204

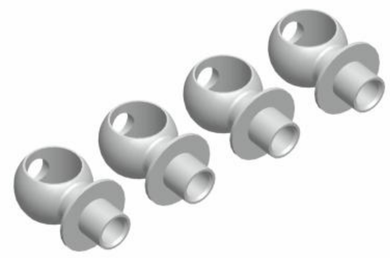

RAS-SHOCK CAP BALL END

124211 5.9x7mm
124311 5.9x10mm
124411 5.9x12mm

RAS-SHOCK CAP BALL END

124501

RAS-SHOCK HOLDER TOOL

129250 1.2x21x5.0 RD 2.0KG
129255 1.2x21x5.5 SR 1.8KG
129260 1.2x21x6.0 YE 1.6KG
129265 1.2x21x6.5 BL 1.4KG

SUSPENSION SPRING

129345 1.4x19x4.5 RD 4.0KG
129350 1.4x19x5.0 SR 3.5KG
129355 1.4x19x5.5 YE 3.0KG
129360 1.4x19x6.0 BL 2.5KG

SUSPENSION SPRING

129450 1.4x21x5.0 RD 3.5KG
129455 1.4x21x5.5 SR 3.0KG
129460 1.4x21x6.0 YE 2.5KG
129465 1.4x21x6.5 BL 2.0KG

SUSPENSION SPRING

129550 1.5x21x5.0 RD 4.5KG
129555 1.5x21x5.5 SR 4.0KG
129560 1.5x21x6.0 YE 3.5KG
129565 1.5x21x6.5 BL 3.0KG

SUSPENSION SPRING

121011

COMPOSITE BUMPER

121012

COMPOSITE UPPER HOLDER FOR BUMPER

121021

FRONT BODY MOUNT SET

121022

REAR BODY MOUNT SET

161024

REAR BODY MOUNT SET-71MM LENGHT

121063

38T

TIMING BELT PULLEY

121067

38T

COMPOSITE GEAR DIFF. CASE&COVER

125226

20T

20T FIXED PULLEY (NARROW)

121032

COMPOSITE UPRIGHT REAR

121049

4.9mm

COMPOSITE BALL JOINT 4.9MM - OPEN

121249

4.9mm

COMPOSITE BALL JOINT 4.9MM

121023

BODY SUPPORT

121081

COMPOSITE SERVO HORN

121096

COMPOSITE ADJUSTMENT BALL-BEARING HUB

121099

2.0PIN

DRIVE SHAFT REPLACEMENT PLASTIC CAP

121179

COMPOSITE STEERING BLOCK WIHT BEARING HOLDER

1/10 ELECTRIC TOURING CAR

121320

90°

90° REARVIEW MIRROR

121322

40°

40° REARVIEW MIRROR

121324

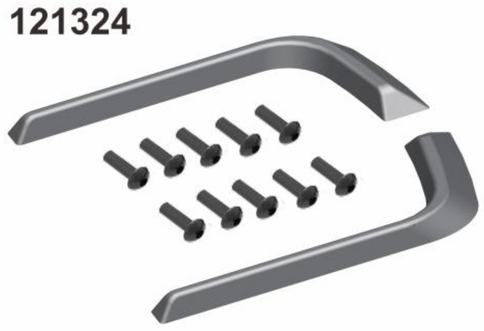

PROTE CTION RACK

121307

COMPOSITE REAR DRIVE REAR BUMP

120200

OPTIONAL FLOATING SERVO MOUNT

120202

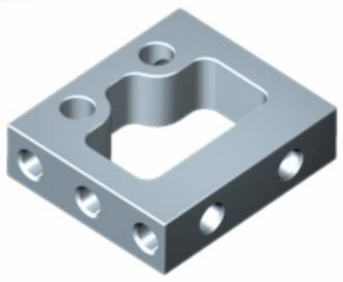

SUSPEENSION RUDDER FRAME-STRAIGHT 3 HOLE

123061

2-HOLE

FLOATING SERVO COLUMN 2 HOLE ALU

121113

S2 3.6 ALU

GEAR DIFFERENTIAL-SET-METAL GEAR

121114

S2 3.6

GEAR DIFFERENTIAL-PLASTIC SET

161112

S2 3.1 ALU

OPTIONAL GEAR DIFFERENTIAL - SET

161113

S2 3.1

GEAR DIFFERENTIAL - SET

161112

S2 3.1 STEEL

GEAR DIFFERENTIAL - SET-STEEL GEAR

990110

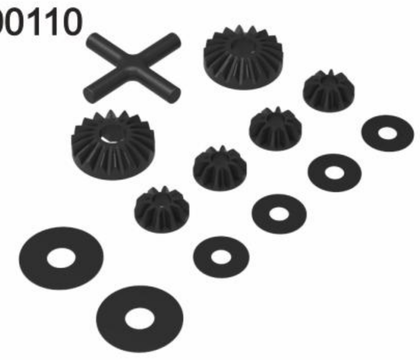

PLANETARY GEAR SET - PLASTIC

990111

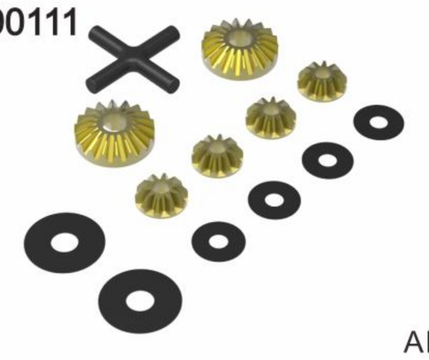

ALU

PLANETARY GEAR SET - HARD PLANET

990111

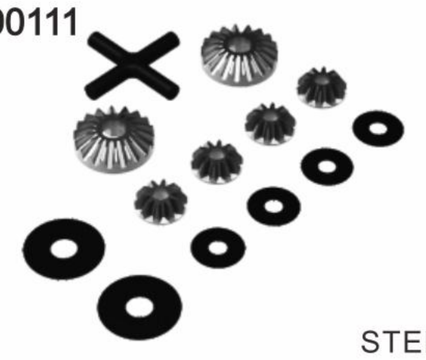

STEEL

PLANETARY GEAR SET-STEEL

122098

DIFF CROSS SHAFT

123011 3.1mm
163130 3.6mm

S2

UNIVERSAL CVD DRIVE SHAFT-SPRING STEEL

128202

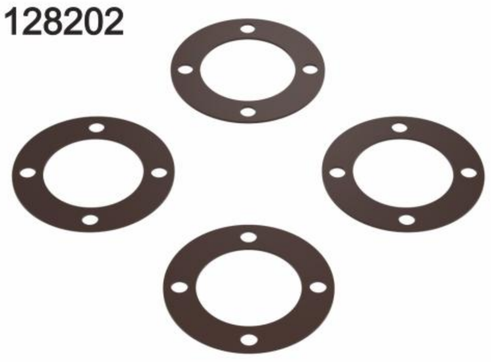

DIFF GASKET

123012 1.2
123014 1.4
123016 1.6
123018 1.8
123020 2.0

ANTI ROLL BAR MALE SHAFT

123112 1.2
123114 1.4
123116 1.6
123118 1.8
123120 2.0

ANTI ROLL BAR FEMALE SHAFT

123221

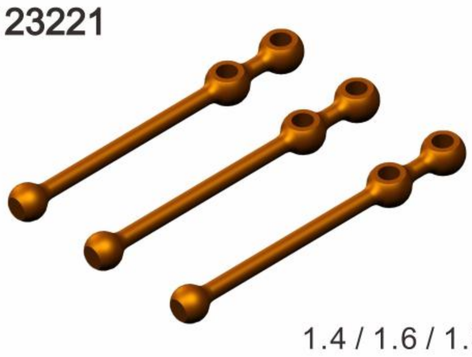

1.4 / 1.6 / 1.8

ANTI ROLL BAR MALE SHAFT (COMPLETE SET)

123222

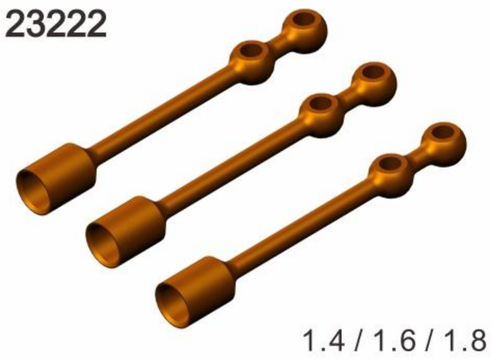

1.4 / 1.6 / 1.8

ANTI ROLL BAR FEMALE SHAFT HOLDER (COMPLETE SET)

123223

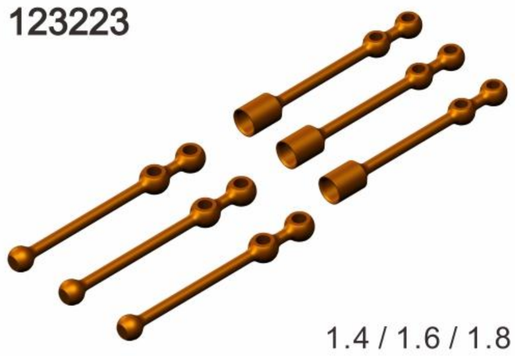

1.4 / 1.6 / 1.8

ANTI ROLL BAR MALE & FEMALE SHAFT (COMPLETE SET)

123890

S2 3.0PING

STEERING WITH CVD UNIVERSAL JOINT (COMPLETE SET)

1/10 ELECTRIC TOURING CAR

MTS-FFV3M

123891

S2 3.0OPIN

STEERING WITH CVD UNIVERSAL JOINT AND WHEEL HUB(COMPLETE SET)

123702 2DEG
127304 4DEG
127306 6DEG

ALU

STEERING BLOCK HOLDER

123031

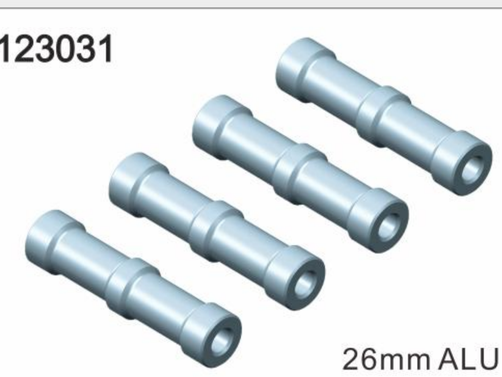

26mm ALU

CHASSIS STANDOFF POST-ALU

123035

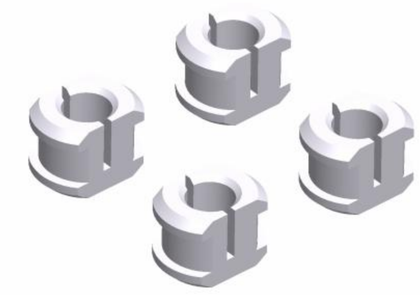

ARM DROOP SCREW BUSHING

123046

SUSPENSION ARM BALL JOINT HOLDER

123047

SUSPENSION ARM BALL JOINT HEX NUT M6.5

123048

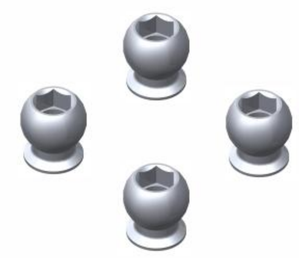

H3.0

BALL UNIVERSAL 5.8MM HEX (H3)

125206

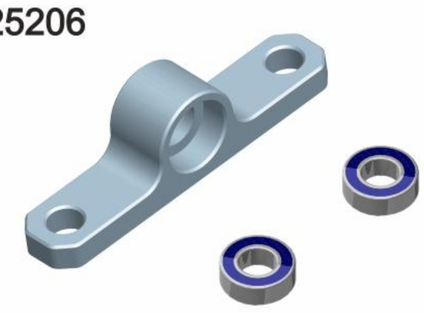

ALU

STEERING MOUNT HOLDER - ALU

125207

ALU

STEERING PLATE - ALU

123055

ALU

SPRING STEEL STEERING SHAFT - MTS T3

125104

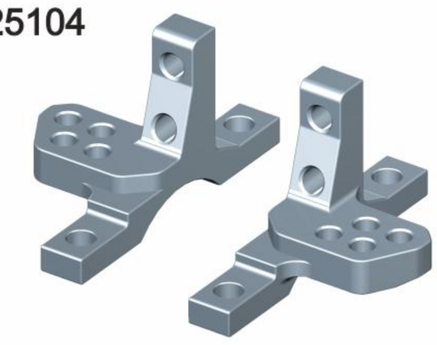

REAR BEARING SLEEVE CLAMP (L+R)

125232

26mm

ALU. FRONT BULKHEAD 26MM (FF-V3M)

125130

26mm

ALU. REAR BULKHEAD (FF-V3)

125231

26mm

ALU. SPUR GEAR SHAFT MOUNT - FF-V3M

125230

26mm

ALU. MOTOR AND SPUR GEAR SHAFT MOUNT - FF-V3M

125230

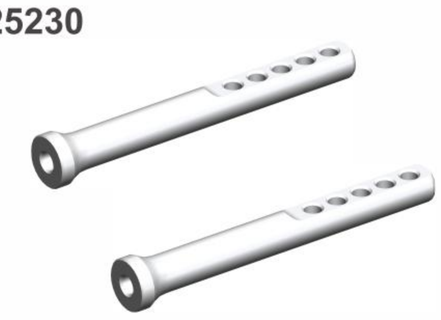

ALU

REAR BODY MOUNT SET -ALU

125234

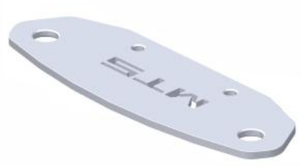

STEEL

FRONT ANTI-COLLISION TOP PLATE-STEEL

125233

COPPER

FRONT ANTI-COLLISION COUNTERWEIGHT - BRASS

125012 H12x5mm
125012-1 H12x5mm+1
125012-2 H12x5mm+2
125012-3 H12x5mm+3
125012-4 H12x5mm+4

OPTION ALU WHEEL HUB

125420

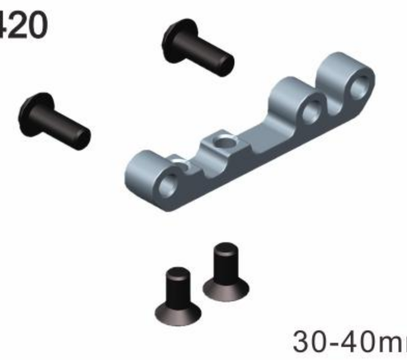

30-40mm

30-40mm FAN MOUNT

123028

ALU

ALU.BATTERY STANDOFF POST

125226-AL

ALU 20T

ALU. 20T FIXED PULLEY(NARROW)

125228

4.0

SOLID LAYSHAFT (NARROW)4.0 T3M

1/10 ELECTRIC TOURING CAR

MTS-FFV3M

125333

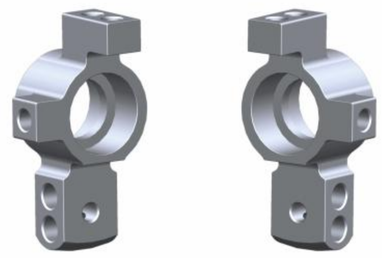

REAR WHEEL CUP L+R ALU

125451

ALU FR

FRONT ARM JOINT HOLDER ALU

125452

ALU FL

FRONT ARM JOINT HOLDER ALU

125453

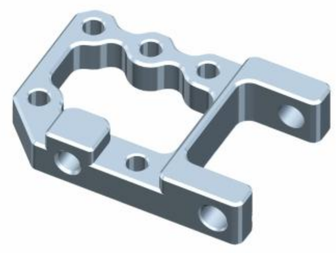

ALU RR

ALU. REAR ARM JOINT HOLDER

125454

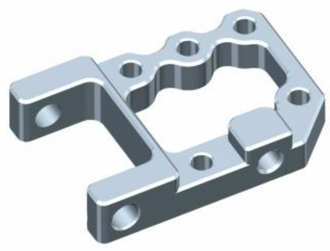

ALU RL

ALU. REAR ARM JOINT HOLDER

128166

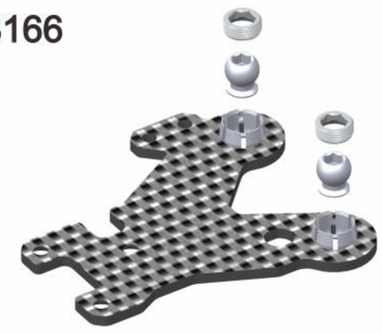

FL

2.0MM GRAPHITE FRONT ARM (L)

128167

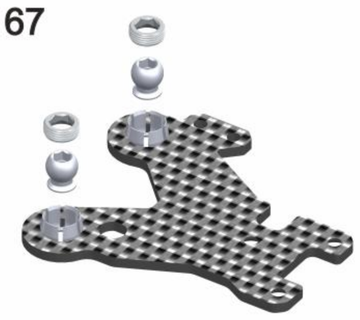

FR

2.0MM GRAPHITE FRONT ARM (R) - MTS T3M

128168

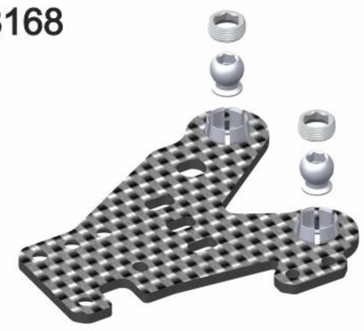

RL

2.0MM GRAPHITE REAR ARM (L) - MTS T3M

128169

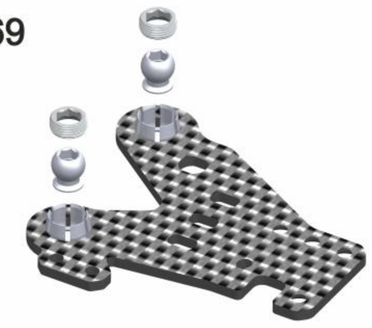

RR

2.0MM GRAPHITE REAR ARM (R) - MTS T3M

128160

FL+FR+RL+RR

2.0MM GRAPHITE ARM (FL+FR+RL+RR)

128251

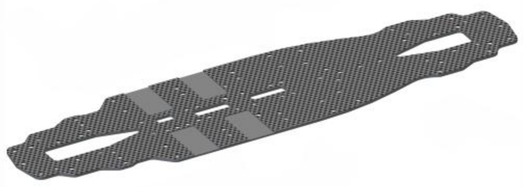

V3M

2.0MM GRAPHITE CHASSIS (FF-V3M)

128222

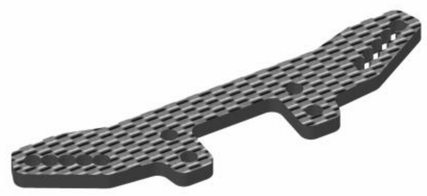

F

3.0MM CARBON GRAPHITE SHOCK TOWER (FRONT)

128223

R

3.0MM CARBON GRAPHITE SHOCK TOWER (REAR)

128254

F

2.0MM CARBON GRAPHITE 2ND DESK(FRONT PART) - FF-V3M

128255

R

2.0MM GRAPHITE 2ND DESK(REAR PART) - FF-V3M

128115

FLOATING SERVO MOUNT PLATE(2mm GRAPHITE)

128146 139mm
128145 96mm

139mm

BATTERY HOLDER PLATE 139 (GRAPHITE, FF-V3)

123041

AFTER FLOODING BATTERY FIXING COLUMN

960702

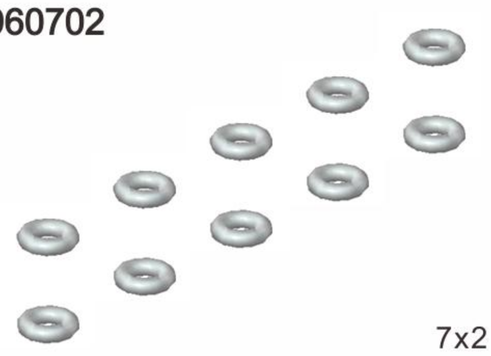

7x2

SILICONE O-RING 7x2

123030

BATTERY MOUNT HANDLER

123029

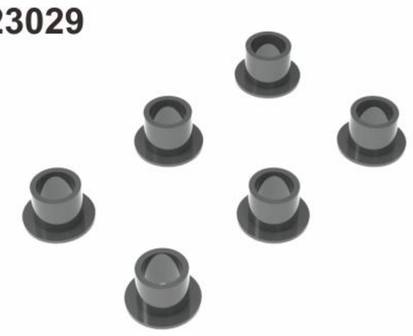

BATTERY MOUNT SCREW BUSHING

127027

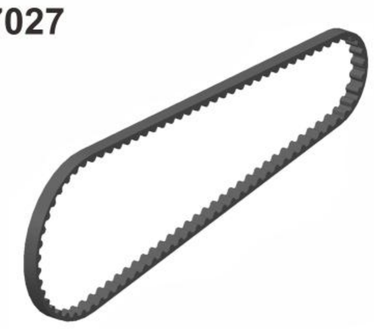

91T

SYNCHRONOUS BELT SHORT-273 91T

127127

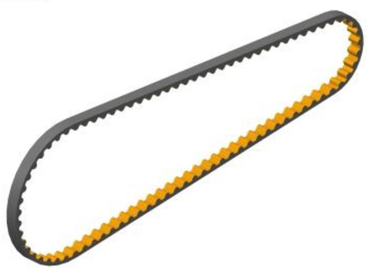

FIBRE 91T

SYNCHRONOUA BELT SHORT-FIBRE-273 91T

127227

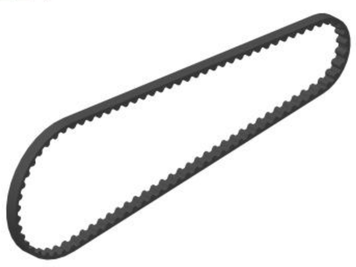

PU KEVLAR 91T

SYNCHRONOUS BELT SHORT-PU KEVLAR-273 91T

1/10 ELECTRIC TOURING CAR

MTS-FFV3M

128210
128310 45°

AFTER FLOODING FOAM BUMPER

123005

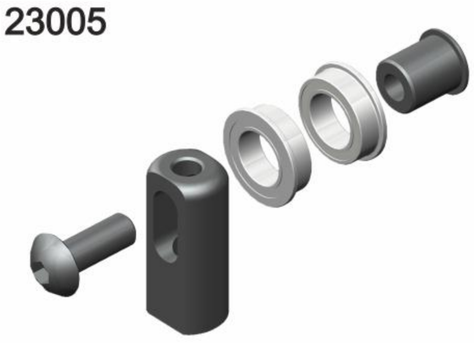

BELT TENSIONER SET

925800

5.8mm

BALL UNIVERSAL 5.8MM HEX

925801

5.8mm H3.0

BALL UNIVERSAL 5.8MM HEX

924900

4.9mm

PIVOT BALL 4.9 MM DOUBLE BEVEL SHOULDERS

924904 4.9x4
924906 4.9x6
924908 4.9x8
924910 4.9x10

4.9mm

BALL END 4.9MM WITH THREAD 6MM H2.0

924966 4.9X6 L6
924968 4.9X8 L6

924986 4.9X6 L8
924988 4.9X8 L8

4.9mm L

BALL END 4.9mm L WITH THREAD

925804 5.8x4
925805 5.8x5
925806 5.8x6
925808 5.8x8
925810 5.8x10

5.8mm

BALL END 5.8MM WITH THREAD

925828 5.8x8 L12

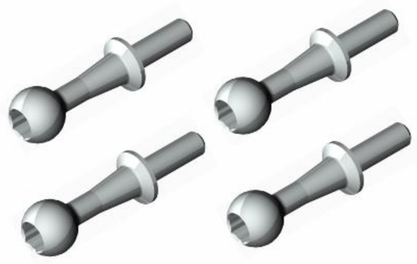

5.8mm L

BALL ENDWITH THREAD H3.0

950318 3X18MM
950320 3X20MM

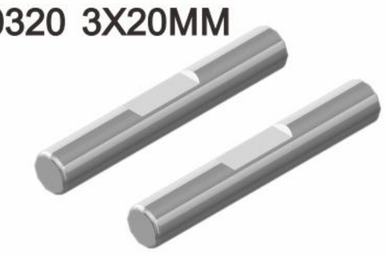

REAR UPRIGHT PIVOT PIN

940060

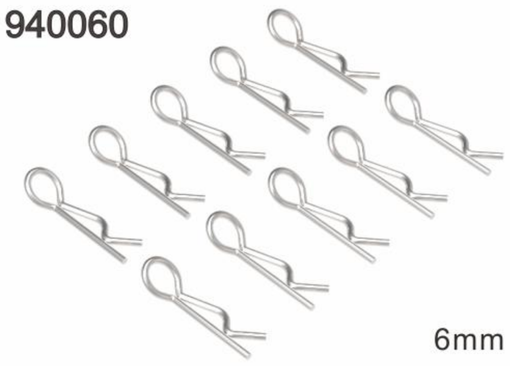

6mm

BODY CLIP

940100

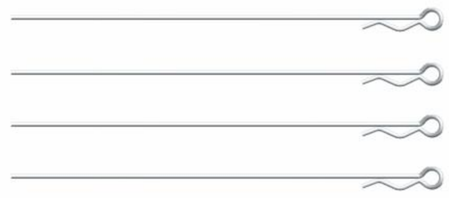

6mm

LONG BODY CLIP

920718 18mm
920720 20mm
920722 22mm
920724 24mm
920728 28mm
920732 32mm
920736 36mm
920740 40mm
920745 45mm
920750 56mm

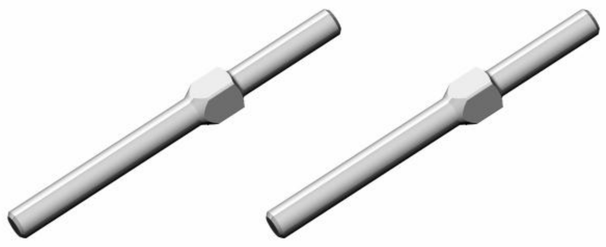

M3 H3 SUS

920318 18mm
920320 20mm
920322 22mm
920324 24mm
920328 28mm
920332 32mm
920336 36mm
920340 40mm
920345 45mm
920350 50mm

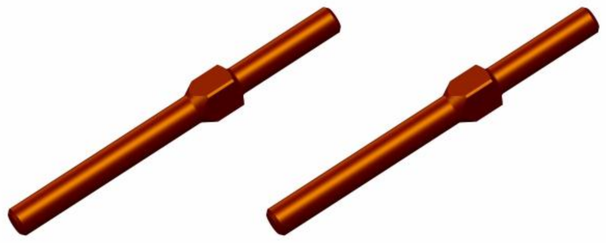

M3 H3 S2

BALL END 5.8MM WITH THREAD

BALL END 5.8MM WITH THREAD

915325 M3x2.5
915303 M3x3
915304 M3x4
915306 M3x6
915308 M3x8
915310 M3x10
915312 M3x12
915314 M3x14

915404 M4x4
915405 M4x5
915406 M4x6
915408 M4x8
915410 M4x10
915412 M4x12

915504 M5x4
915505 M5x5
915506 M5x6

M3 / M4 / M5

917256 M2.5x6
917258 M2.5x8

917304 M3x4
917306 M3x6
917308 M3x8
917310 M3x10
917312 M3x12
917314 M3x14
917316 M3x16

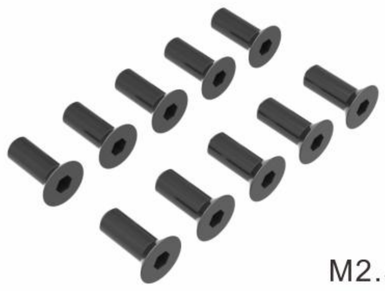

M2.5 / M3

HEX SET SCREW

HEX SCREW FLAT HEAD

916205 M2.5x5

916308 M3x8
916310 M3x10
916312 M3x12
916314 M3x14
916316 M3x16
916318 M3x18
916320 M3x20
916322 M3x22
916325 M3x25

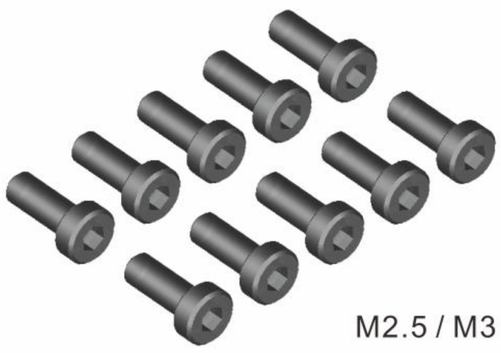

M2.5 / M3

918206 M2x6
918208 M2x8
918210 M2x10

918256 M2.5x6
918258 M2.5x8
918110 M2.5x10
918112 M2.5x12
918114 M2.5x14

918304 M3x4
918305 M3x5
918306 M3x6
918308 M3x8
918310 M3x10
918312 M3x12
918314 M3x14
918316 M3x16

M2 / M2.5 / M3

HEX SOCKET CAP SCREWS

HEX SCREW ROUND HEAD

919402 M4-ALU

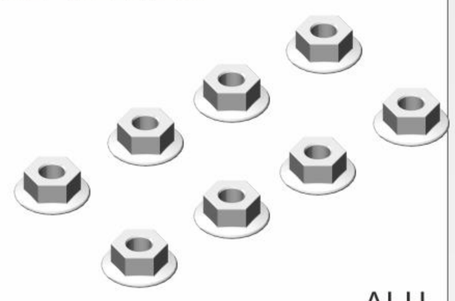

ALU

NUT ALU

919300 M3
919400 M4
919301 M3-F
919401 M4-F

STEEL

NUT STEEL

919300-Ti M3
919400-Ti M4
919301-Ti M3-F
919401-Ti M4-F

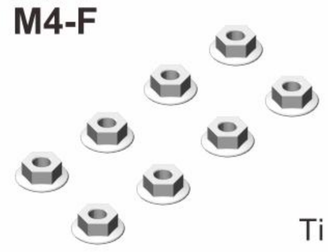

Ti

NUT Ti

916205-GD

M2x5-GD

HEX SOCKET CAP SCREW

918256-GD M2.5x6 GD
918110-GD M2.5x10 GD
918112-GD M2.5x12 GD
918114-GD M2.5x14 GD

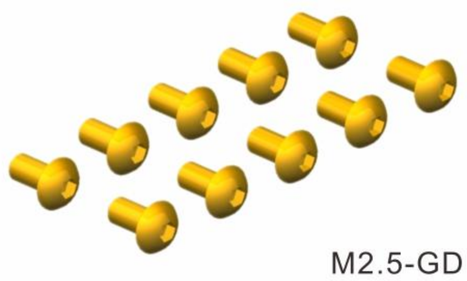

M2.5-GD

HEX SCREW ROUND HEAD M2.5-GD

915325-GD M3x2.5 GD
915304-GD M3x4 GD
915306-GD M3x6 GD
915308-GD M3x8 GD
915310-GD M3x10 GD
915312-GD M3x12 GD
915314-GD M3x14 GD

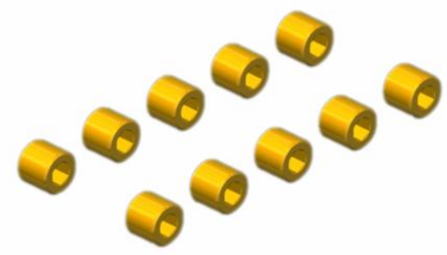

M3-GD

HEX SET SCREW M3-GD

918304-GD M3x4 GD
918305-GD M3x5 GD
918306-GD M3x6 GD
918308-GD M3x8 GD
918310-GD M3x10 GD
918312-GD M3x12 GD
918314-GD M3x14 GD
918316-GD M3x16 GD

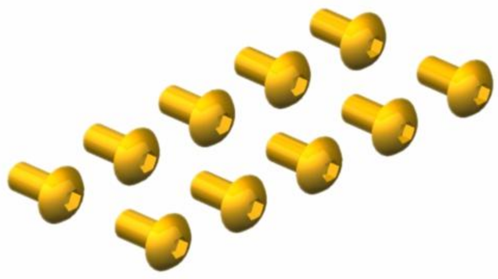

M3-GD

HEX SCREW ROUND HEAD M3-GD

917256-GD M2.5x6 GD
917258-GD M2.5x8 GD

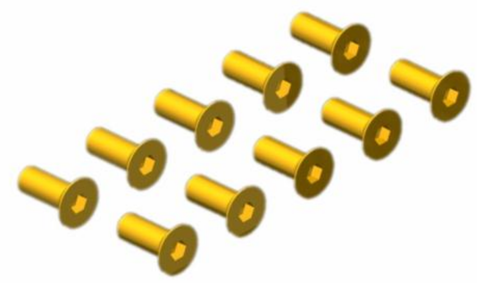

M2.5-GD

HEX SCREW FLAT HEADM2.5-GD

917304-GD M3x4 GD
917306-GD M3x6 GD
917308-GD M3x8 GD
917310-GD M3x10 GD
917312-GD M3x12 GD
917314-GD M3x14 GD
917316-GD M3x16 GD

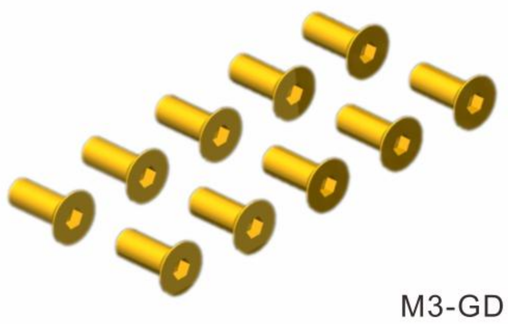

M3-GD

HEX SCREW ROUND HEAD M3-GD

918254-Ti M2.5x4 Ti
918256-Ti M2.5x6 Ti
918258-Ti M2.5x8 Ti
918110-Ti M2.5x10 Ti
918112-Ti M2.5x12 Ti
918114-Ti M2.5x14 Ti

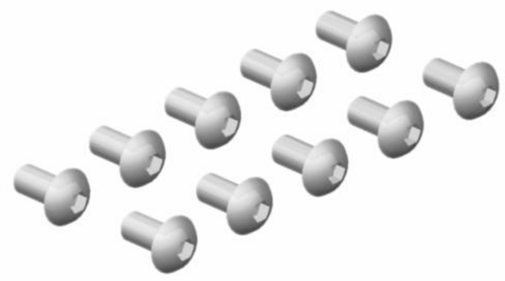

M2.5-Ti

HEX SCREW FLAT HEAD M2.5-Ti

918304-Ti M3x4 Ti
918305-Ti M3x5 Ti
918306-Ti M3x6 Ti
918308-Ti M3x8 Ti
918310-Ti M3x10 Ti
918312-Ti M3x12 Ti
918314-Ti M3x14 Ti
918316-Ti M3x16 Ti

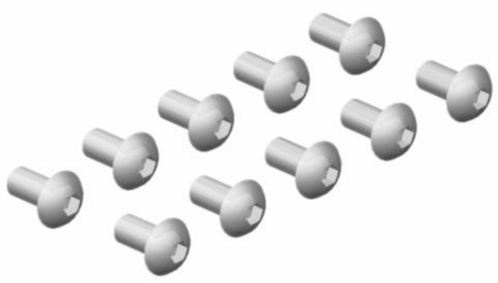

M3-Ti

HEX SCREW FLAT HEAD M3-Ti

917254-Ti M2.5x4 Ti
917256-Ti M2.5x6 Ti
917258-Ti M2.5x8 Ti
917110-Ti M2.5x10 Ti

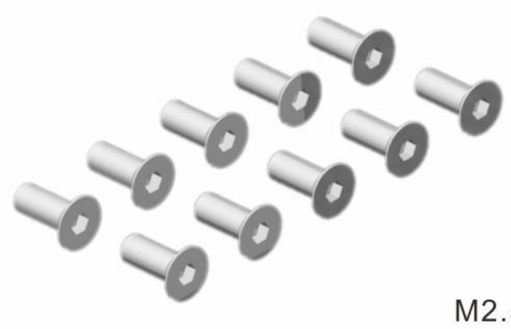

M2.5-Ti

HEX SCREW ROUND HEAD M3-Ti

917304-Ti M3x4 Ti
917305-Ti M3x5 Ti
917306-Ti M3x6 Ti
917308-Ti M3x8 Ti
917310-Ti M3x10 Ti
917312-Ti M3x12 Ti
917314-Ti M3x14 Ti
917316-Ti M3x16 Ti

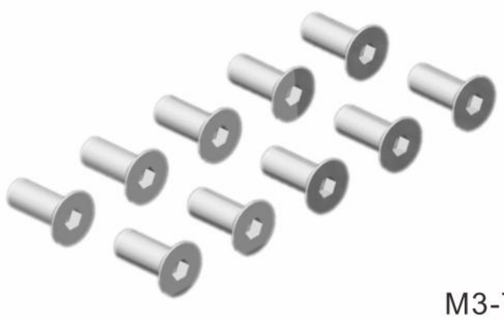

M3-Ti

HEX SCREW FLAT HEAD M3-Ti

915308-P

M3x8-PA

HEX SET SCREW M3x8 PA

916310-P
916312-P
916315-P

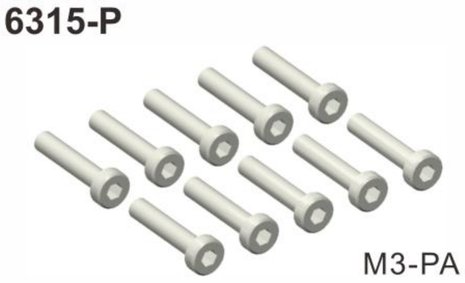

M3-PA

HEX SOCKET CAP SCREW M3-PA

940361 3x6x1
940361-5 3x6x1.5
940362 3x6x2
940362-5 3x6x2.5
940363 3x6x3
940364 3x6x4
940365 3x6x5
940366 3x6x6
940368 3x6x8
940361-0 3x6x10
940361-2 3x6x12

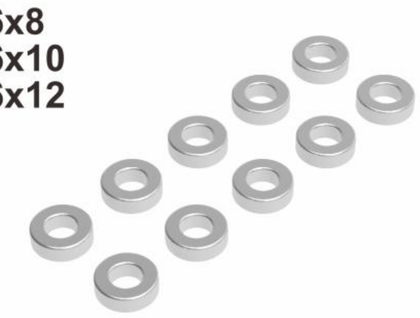

ALU

WASHER-ALU

930306 3x6x2.5
930308 3x8x4
930418 4x8x3-F
930410 4x10x4
930518 5x8x2.5-F
930508 5x8x2.5
930510 5x10x4
930612 6x12x4
931015 10x15x4

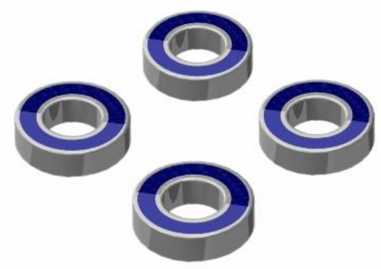

BALL-BEARING

940025 C2.5
940030 C3
940040 C4
940050 C5

E-CLIP

947262 2.5x6x2
947362 3x6x2

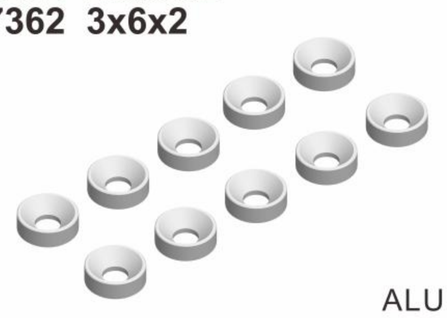

ALU

WASHER SFH SCREW FLAT HEAD-ALU

948362

ALU

CONICAL SHIM-ALU

940391 3x9x1
940391-5 3x9x1.5
940392 3x9x2

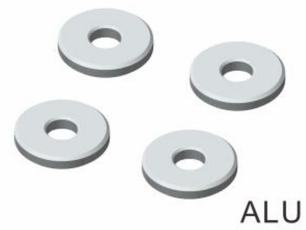

ALU

WASHER-ALU

940265 2.6x6
940272 2.6x7
940373 3x7x0.3
940375 3x7x0.5
943581 3.5x8x0.1
943582 3.5x8x0.2
943583 3.5x8x0.3
943591 3.5x9x0.1
943592 3.5x9x0.2
943593 3.5x9 x0.3
943594 3.5x9 x0.4
945101 5x10x0.1
945102 5x10x0.2
945103 5x10x0.3
945121 5x12x0.1
945122 5x12x0.2
945123 5x12x0.3
941502 12x14.8x0.2
941503 12x14.8x0.3

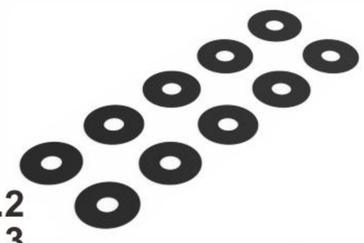

STEEL

WASHER

944003 4x10x0.3
944005 4x10x0.5
945082 5x8x0.2
945083 5x8x0.3
946003 6x11.5x0.3
947005 7x12x0.5
948003 8x12x0.3
948005 8x12x0.5
941302 13.2x15.9x0.2
941303 13.2x15.9x0.3
941304 13.2x15.9x0.4
941305 13.2x15.9x0.5

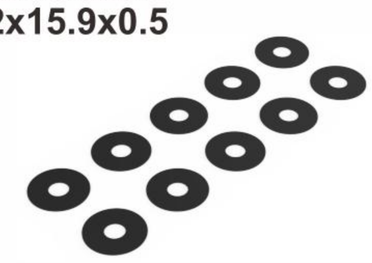

STEEL

WASHER

951509 1.5x9
951510 1.5x9.8
951518 1.5x18
950209 2x9
950210 2x9.8
950212 2x12
950218 2x18
950312 3x12
950317 3x17

PIN

960615 6x1.5
960702 7x2
960722 7x2.2
960802 8x2
960822 8x2.2
960825 8x2.5
960902 9x2
961124 11x2.4
961301 13x1
961401 14x1
961501 15x1-13

PIN

996024 24T
996025 25T
996026 26T
996027 27T
996028 28T
996029 29T
996030 30T
996031 31T
996032 32T
996033 33T
996034 34T
996035 35T
996036 36T
996037 37T
996038 38T
996039 39T
996040 40T
996041 41T
996042 42T
996043 43T
996040 44T
996041 45T
996042 46T

64P

PINON GEAR ALU HARD COATED

994018 18T
994019 19T
994020 20T
994021 21T
994022 22T
994023 23T
994024 24T
994025 25T
994026 26T
994027 27T
994028 28T
994029 29T
994030 30T
994031 31T
994032 32T
994033 33T
994034 34T
994035 35T
994036 36T
994037 37T
994038 38T
994039 39T
994040 40T

48P

PINON GEAR ALU HARD COATED

994013 48P 18-30T

48P

PINON GEAR ALU HARD COATED 18T-30T

996010 64P 24–34T
996011 64P 35–45T

64P

PINON GEAR ALU HARD COATED

994072 72T/48P
994078 78T/48P
994081 81T/48P
994084 84T/48P
994084-WH 84T/48P
994087 87T/48P
994087-WH 87T/48P

48P

SPUR GEAR

1/10 ELECTRIC TOURING CAR

MTS-FFV3M

996110 110T/64P
996110-WH 110T/64P
996116 116T/64P
996116-WH 116T/64P

64P

SPUR GEAR

919502 2g
919503 3g
919505 5g
919510 10g

ROUND SHAPE BALANCE WEIGHT

TP-TPG2404 24R
TP-TPG2804 28R
TP-TPG3204 32R
TP-TPG3404 34R
TP-TPG3604 36R

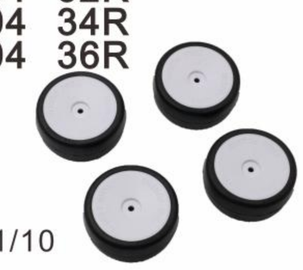

Team Powers 1/10

RACE TIRE SUIT

127663

24mm

SLICK TYRE SET

127662

24mm

SLICK TYRE SET

128402

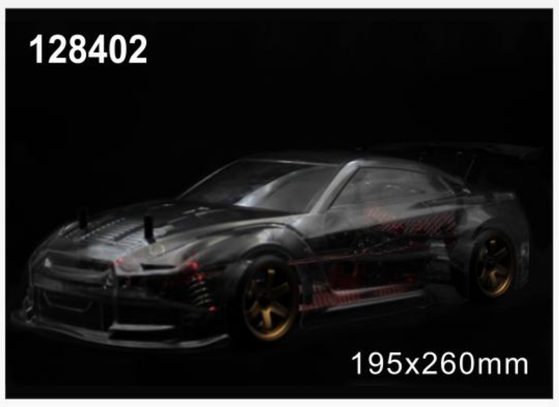

195x260mm

GTR DRIFT CAR SHELL PC 195*260MM

128403

195x260mm

FLAT CAR SHELL PC 195*260MM

128404

195x260mm

FLAT CAR SHELL PC 195*260MM

128401

195x260mm

PULL CAR SHELL PC 195*260MM

128405

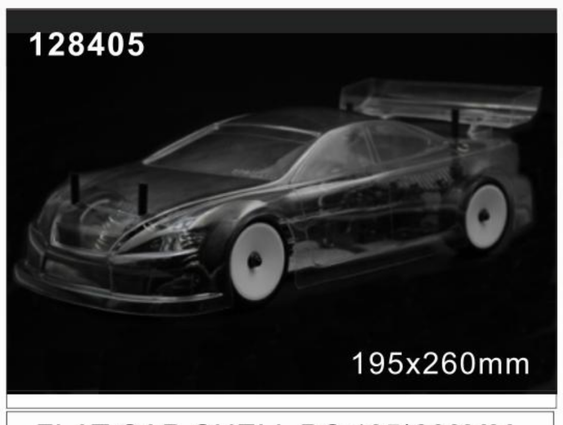

195x260mm

FLAT CAR SHELL PC 195*260MM

195x260mm

AMG DRIFT CAR SHELL PC

900100 THE DIFFERENTIAL OIL
900050 SHOCK ABSORBER OIL
909001 GRAPHITE OIL
909002 ENGINE AFTER RUN OIL
909003 AIR FILTER OIL
909004 ONE-WAY LUBE
909005 CERAMIC BEAD OIL
909006 SINGLE BEARING OIL
909007 HIGH SPEED BEARING OIL
909008 SEAL OIL
909009 HIGH STRENGTH SCREW GLUE
909010 MEDIUM STRENGTH SCREW GLUE
909011 STICKY RUBBER
909012 FUEL LUBRICATION ADDITIVE

THE DIFFERENTIAL OIL