1/10 Electric FFV2 Pro Car Kit

Instruction Manual

2016

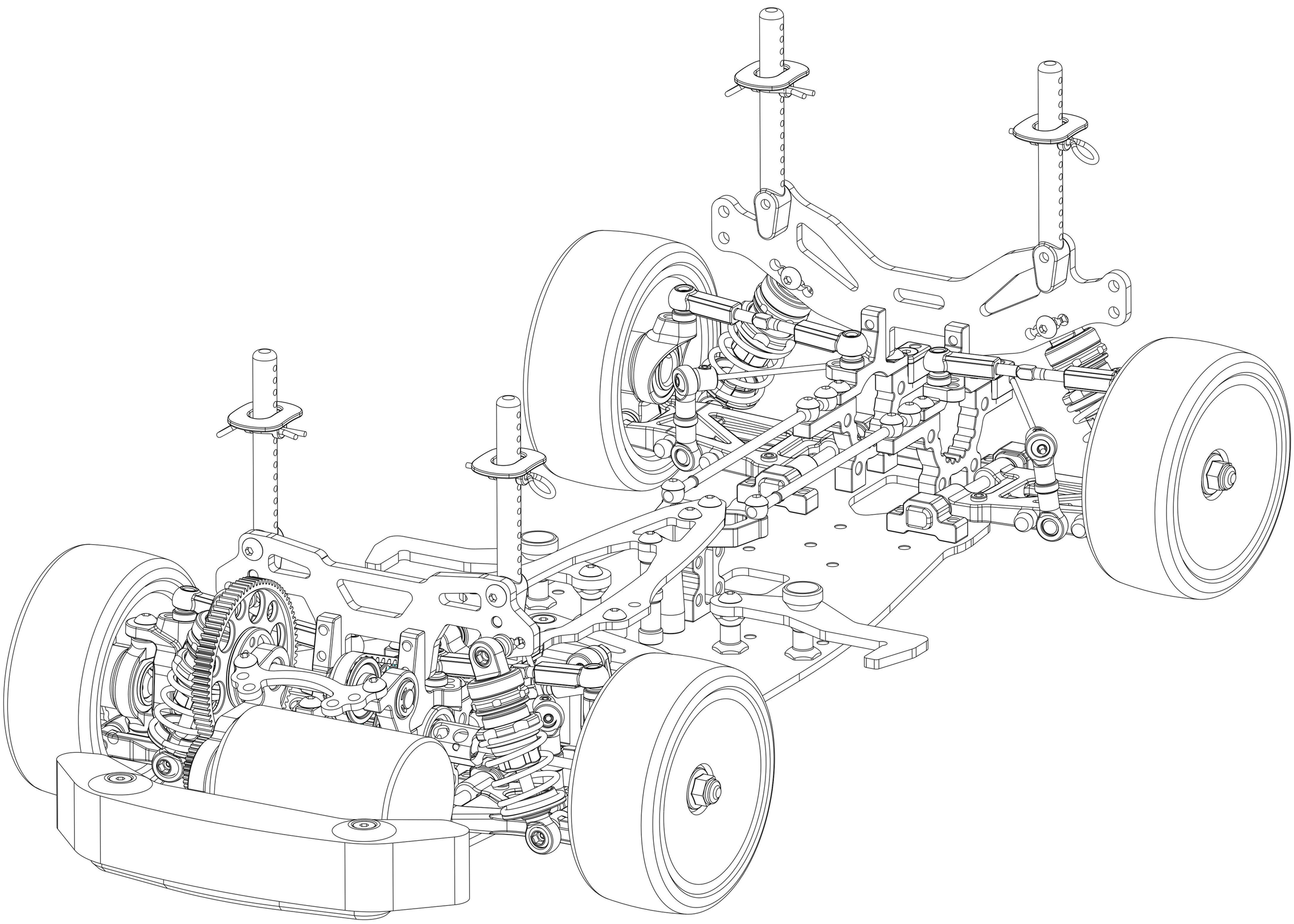

Powered By:

Introduction:

FFV2 Pro is a professional 1:10th front wheel drive car and should be built by aged 14 years or over or that they had experience building and operating R/C model cars before. This is not a toy intended for use by beginners or by children without any supervision of a knowledgeable adult. Please read the instruction manual carefully before building.

Race opt should not be liable for any loss, injury or damages, whether direct, indirect, special, incidental, consequential, arising from the use, misuse, abuse of this product or accessories required to operate this product.

Warnings:

◎ This product is not intended for those ages under 14 year without any adult supervision.

◎ Assemble this kit only in places away from the reach of children.

◎ Exercise car when using tools and sharp instrument and take care some parts that may have sharp edges when building.

◎ Please do not touch any electronic equipment on the model such as motor and speed controller that having higher temperatures after the operation. Otherwise, it may burn yourself seriously by touching them. Better to allow 10~15 minutes to let any electronic equipment cool down.

◎ Please complete a successful pre-run check of your radio equipment and model before the run. Make sure to keep the wheels of the model off the ground when checking the operation of the radio equipment.

◎ When on the model, please always turn on the transmitter before turn on the receiver in the car. When off the model, please always turn off the receiver before turn off the transmitter. Otherwise, the model may become uncontrollable and cause serious damage.

◎ Disconnect the battery pack before storing your model.

◎ Do not get overcharge for the battery or leave battery unattended while charging. Never let children charge the battery without adult supervision.

◎ Do not operate it on public places, roads or areas where its operation can conflict with or disrupt pedestrian or vehicular traffic.

◎ Do not use your model as shown below:

In places where children and people gather	In rain, wind snow or darkness condition
In areas where loud noises can disturb others	At anytime your line of sight to the model may be obstructed or impaired in any way

Electrical Precautions:

- ◎ Please do not allow any metal part to short circuit the battery or any electronic part using inside the car kit.
- ◎ Never put batteries into fire.
- ◎ Use the recommended charger for the transmitter battery and battery for electronic speed control. Please follow the charging instructions carefully. Please do not over charge the battery or choose the wrong charging mode. It becomes dangerous that causes the explosion and lead to the fire. If battery becomes extremely hot during the charging, please seek the advice from or get replacement from the corresponding battery supplier.
- ◎ Please unplug charger when not in use.
- ◎ When not using RC model, please always disconnect and remove the battery.
- ◎ Low battery may result in loss of control. Please stop running the car at once when you find its speed start to slow down.
- ◎ After use the battery, the battery remains heat and please recharges it after the battery is cool down.
- ◎ Never use damaged wires that are dangerous and cause short circuits and may lead to the fire.

Other Equipment Needed (not included):

Radio transmitter & receiver	Battery for transmitter
Electronic speed control	Steering Servo
540 Type brushes or brushless motor	Pinion Gear (48pitch/64pitch)
190mm body shell	7.4V Nimh or Lipo Battery
Touring Car Tire set	Battery charger

Tools Needed (not included):

1.5mm, 2.0mm, 2.5mm allen wrench	5.0mm, 5.5mm, 7.0mm hex socket wrench
Modelers craft knife	Turnbuckle wrench
Calipers/Ruler	Camber gauge
Instant glue/Thread lock glue	Shock and Diff Oil
Thrust, Diff and Joint grease	Paint for body shell

Notes: All replacement parts can be found from www.race-opt.com and can be purchased from local hobby shop. If any further information needed, please email to enquiry@rc-explorer.com.

MTS -FFV2 PRO

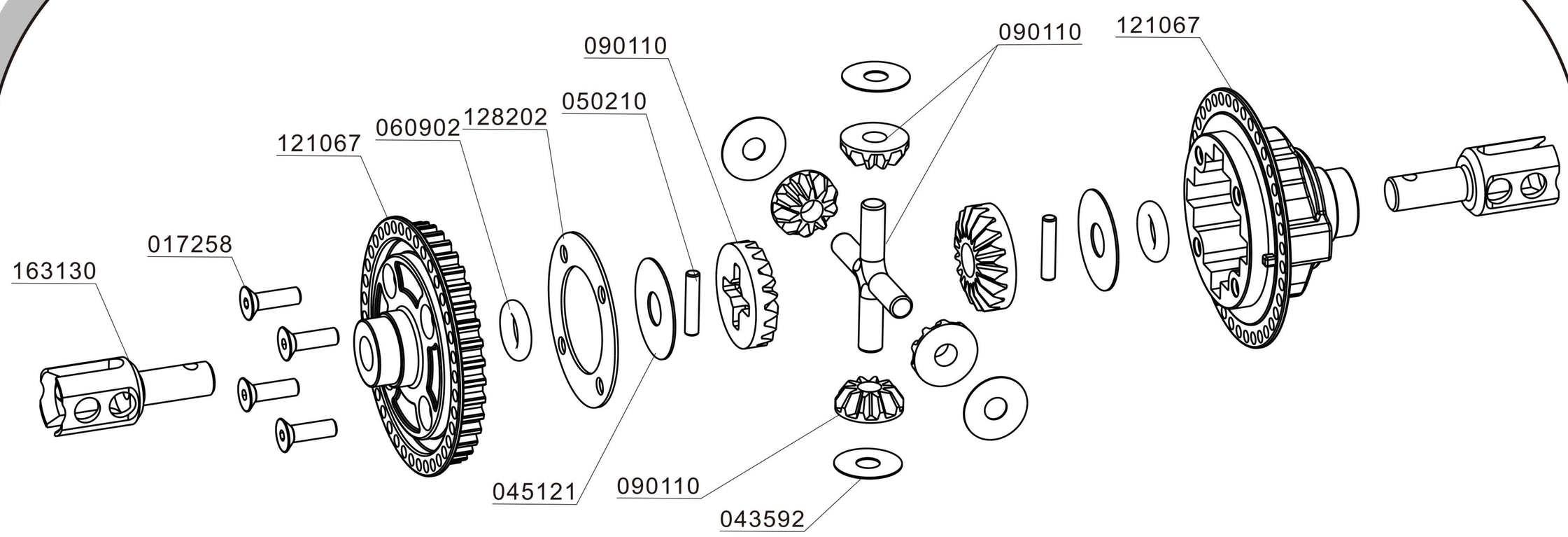

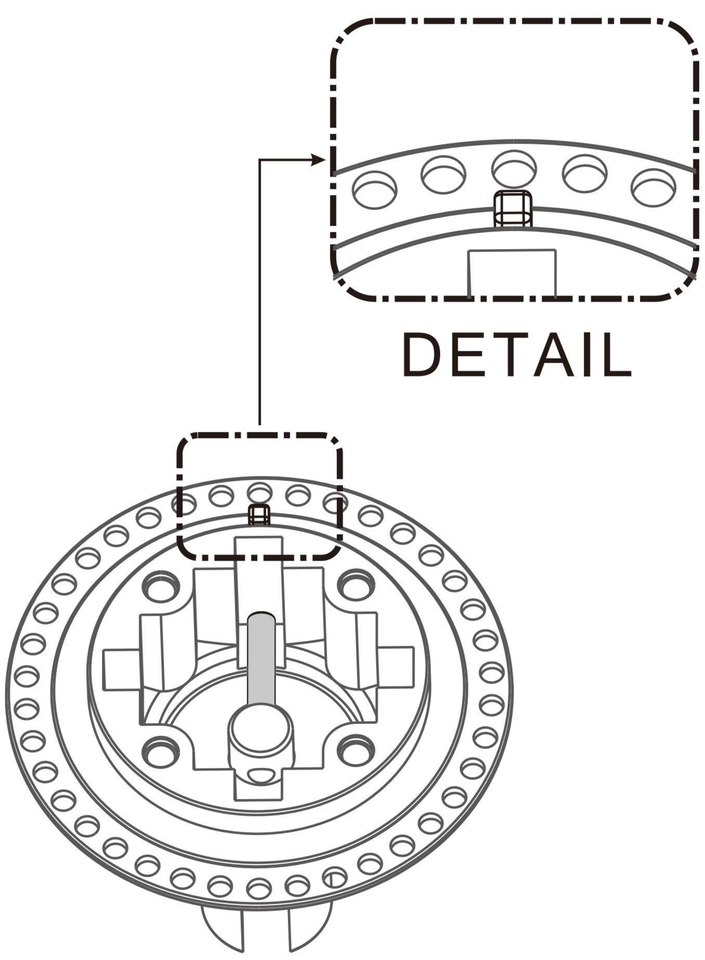

Low-Traction
500 cst

High-Traction
1000 cst

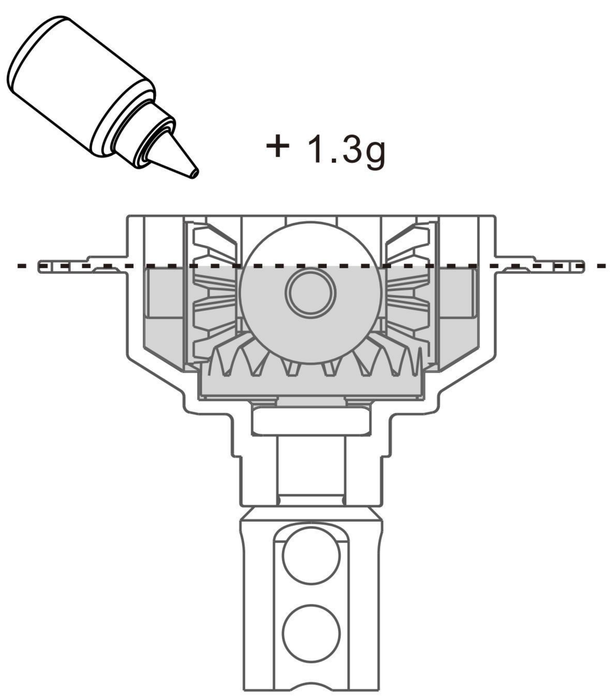

Add 1.3g of oil the diff.

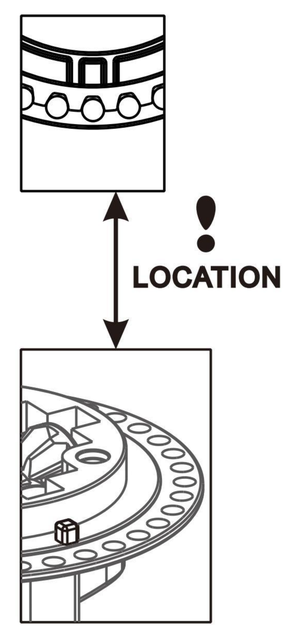

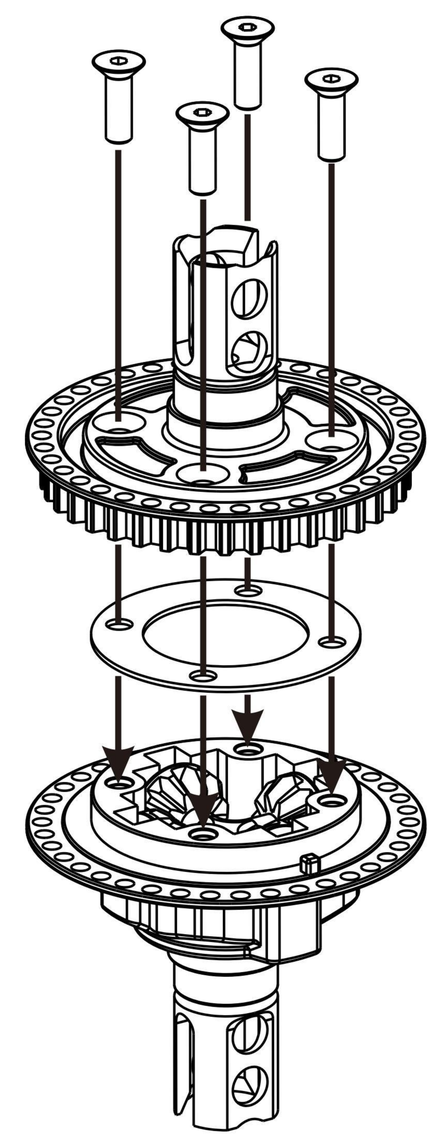

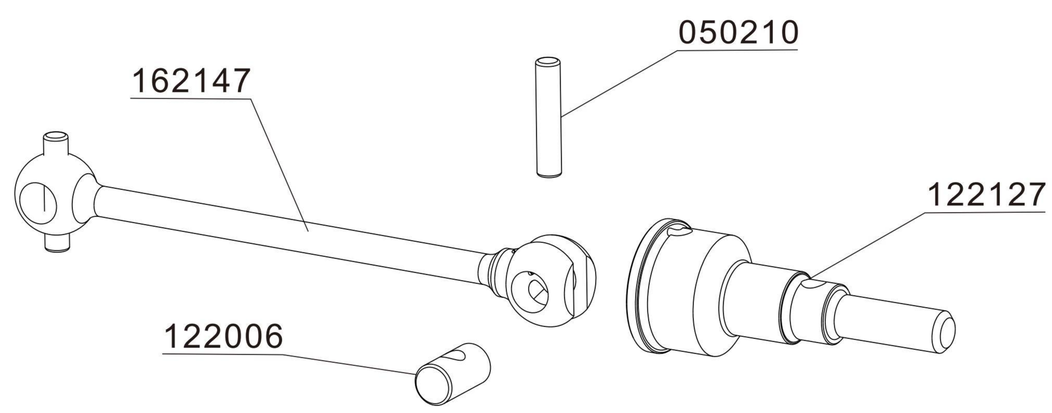

MTS -FFV2 PRO

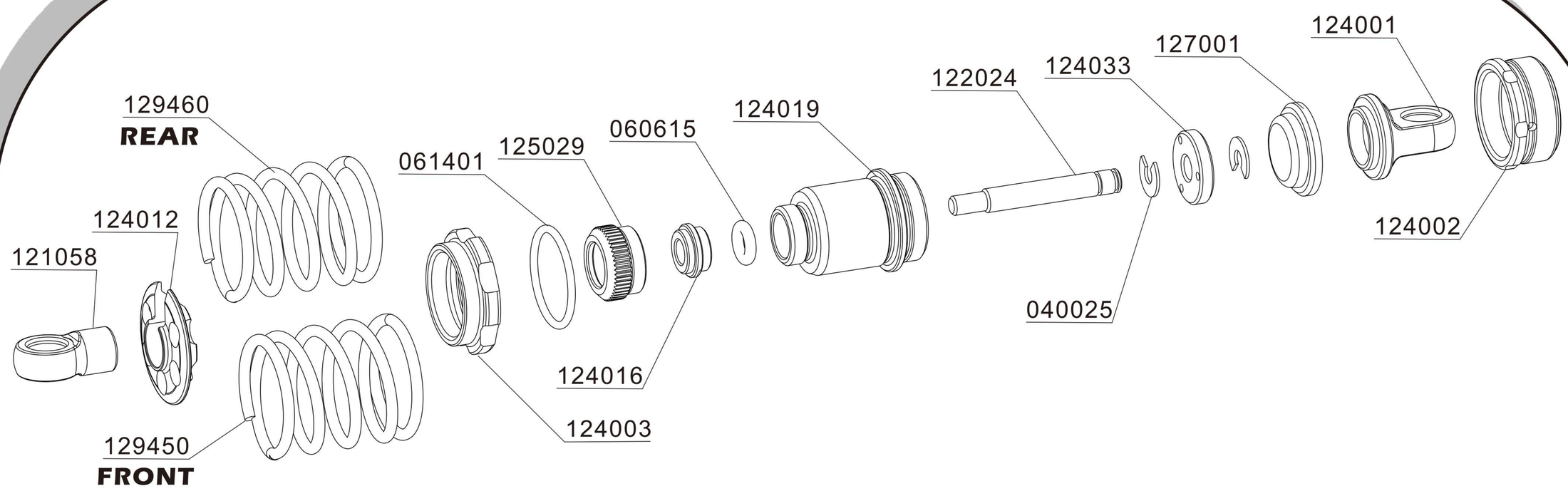

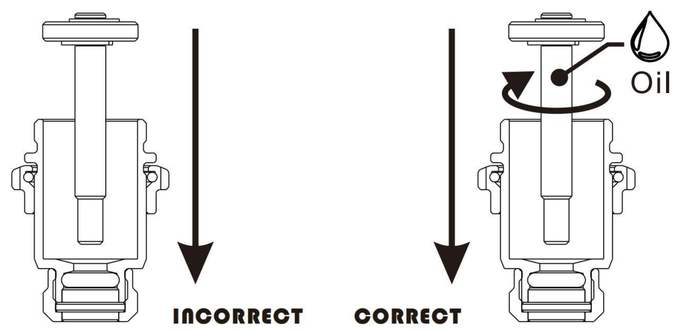

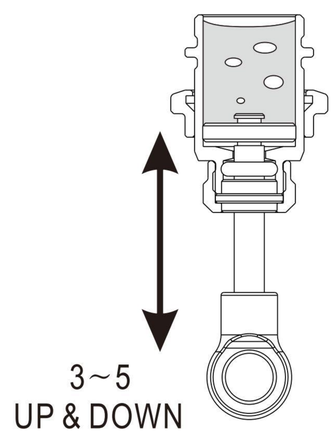

Move the shock shaft up and down a few times to release the air bubbles trapped beneath the piston.

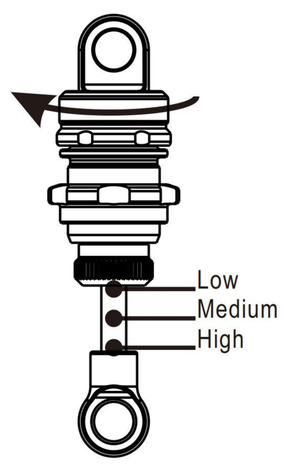

Alternate shock rebound setting.

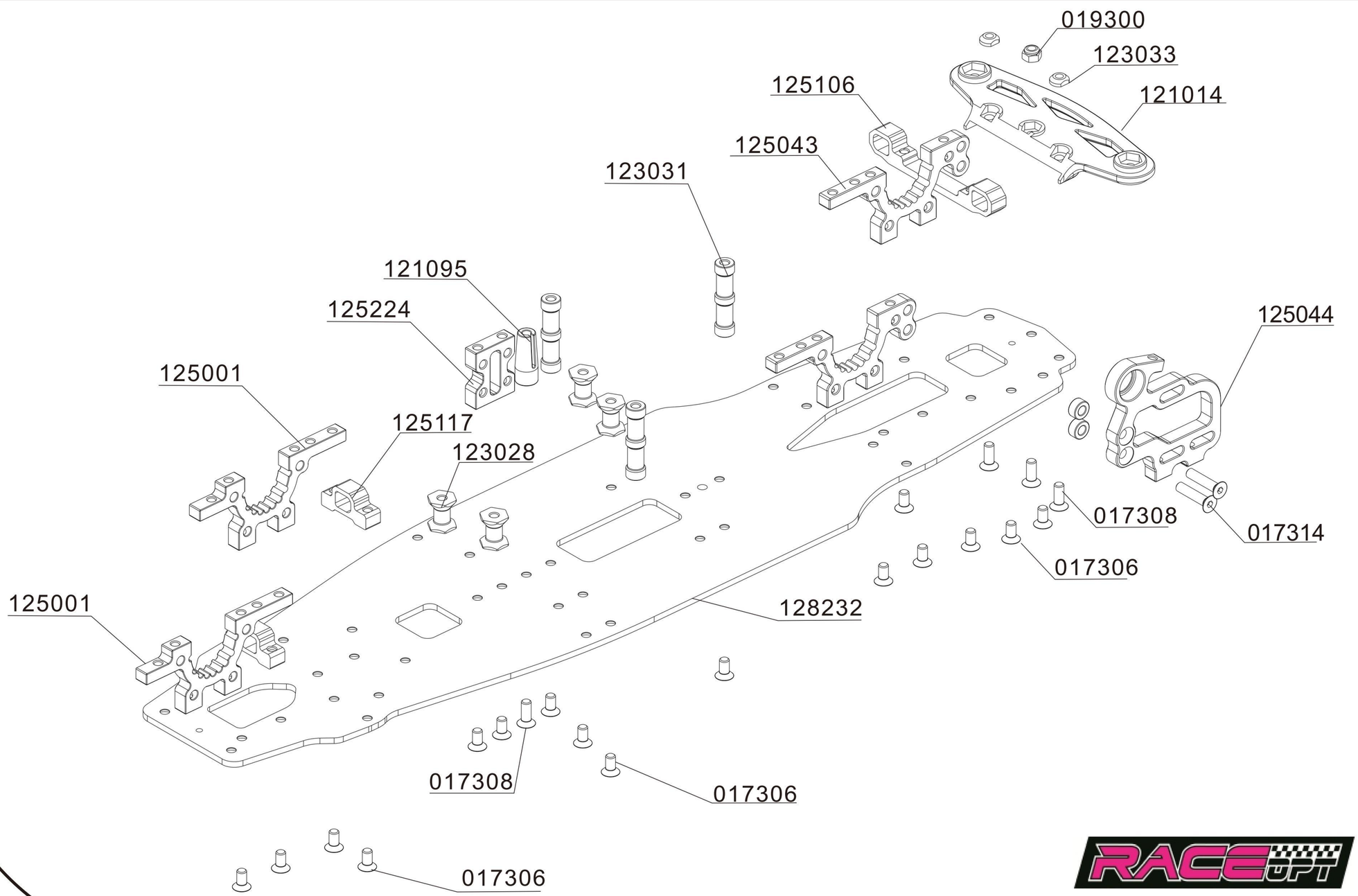

MTS -FFV2 PRO

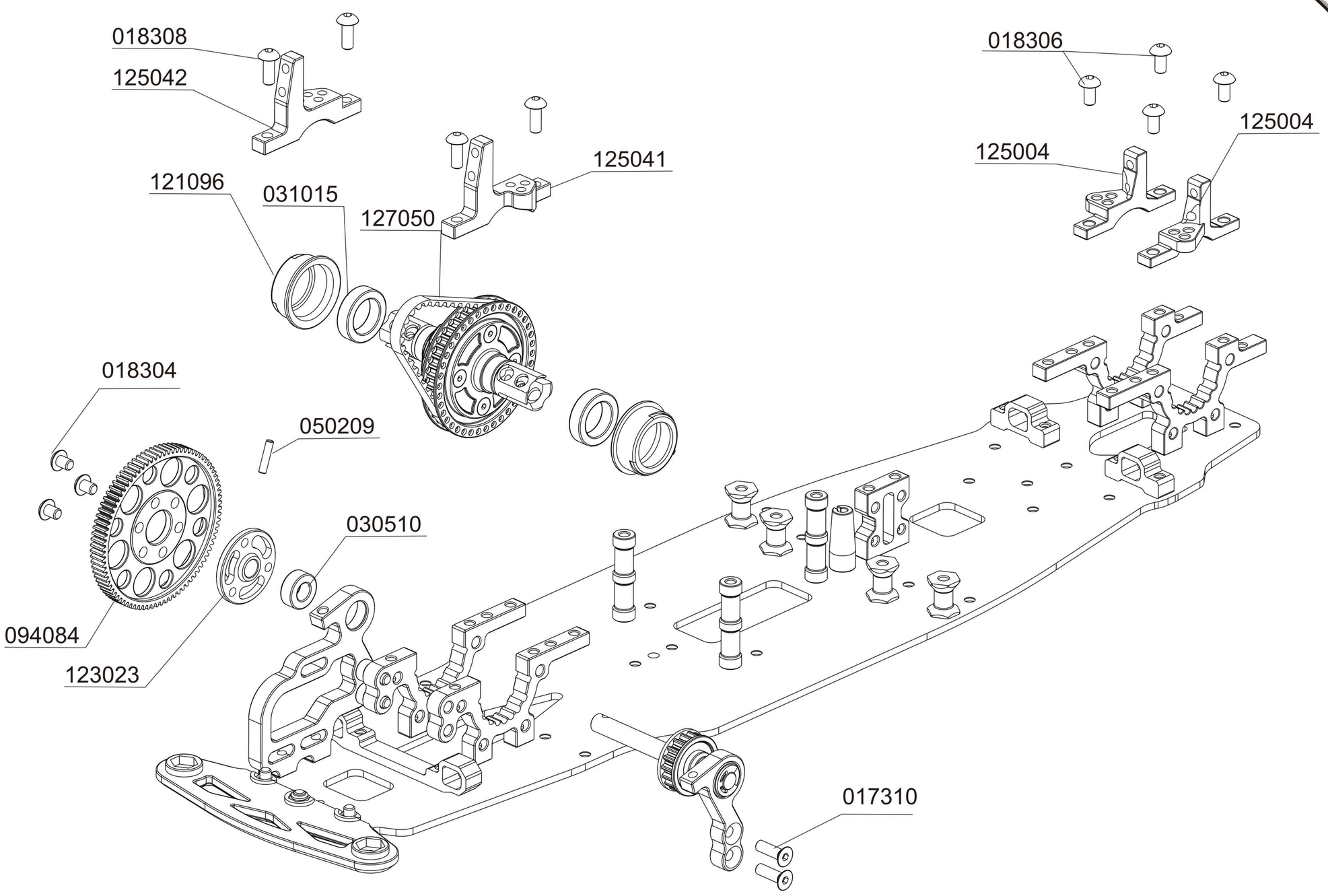
018308
125042
018306
125004
125004
125041
121096
031015
127050
018304
050209
030510
094084
123023
017310

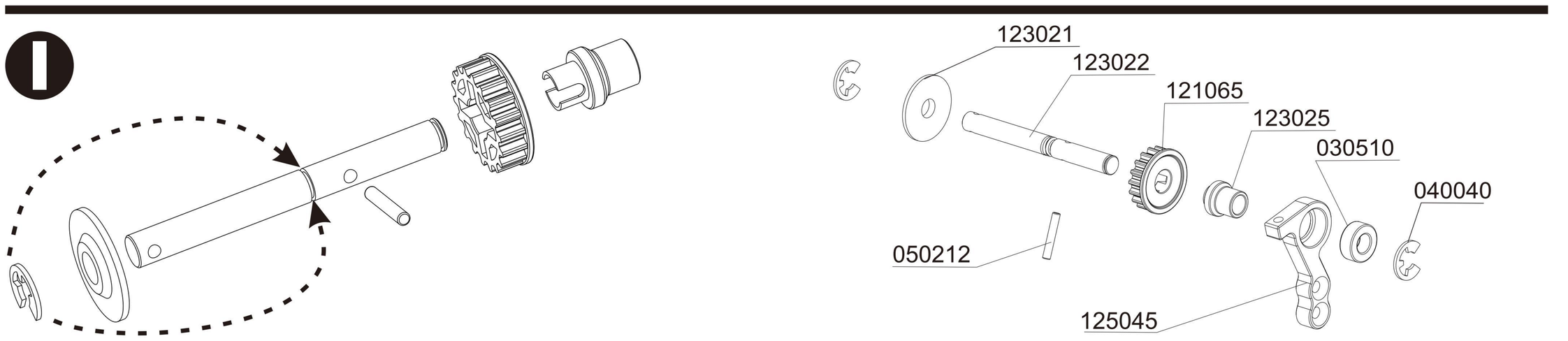
1
123021
123022
121065
123025
030510
040040
050212
125045

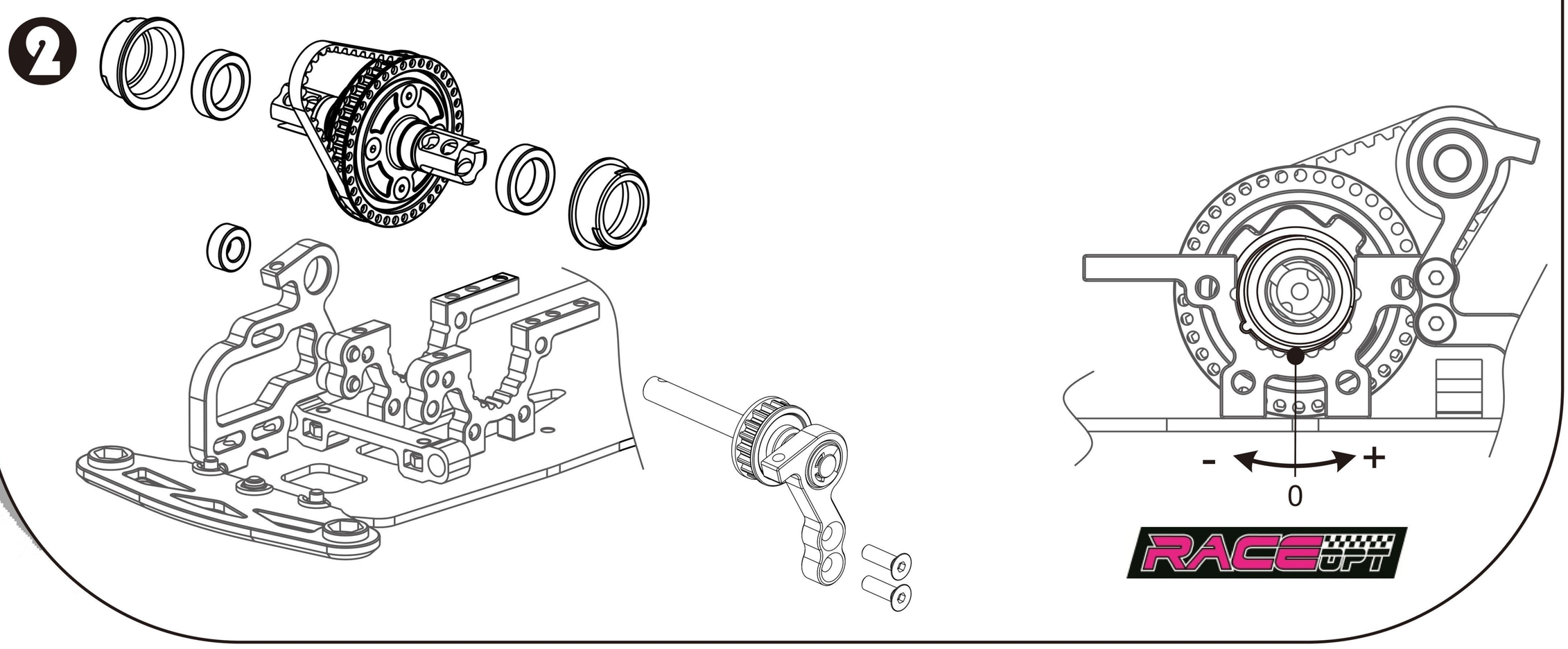
2
-
+
0

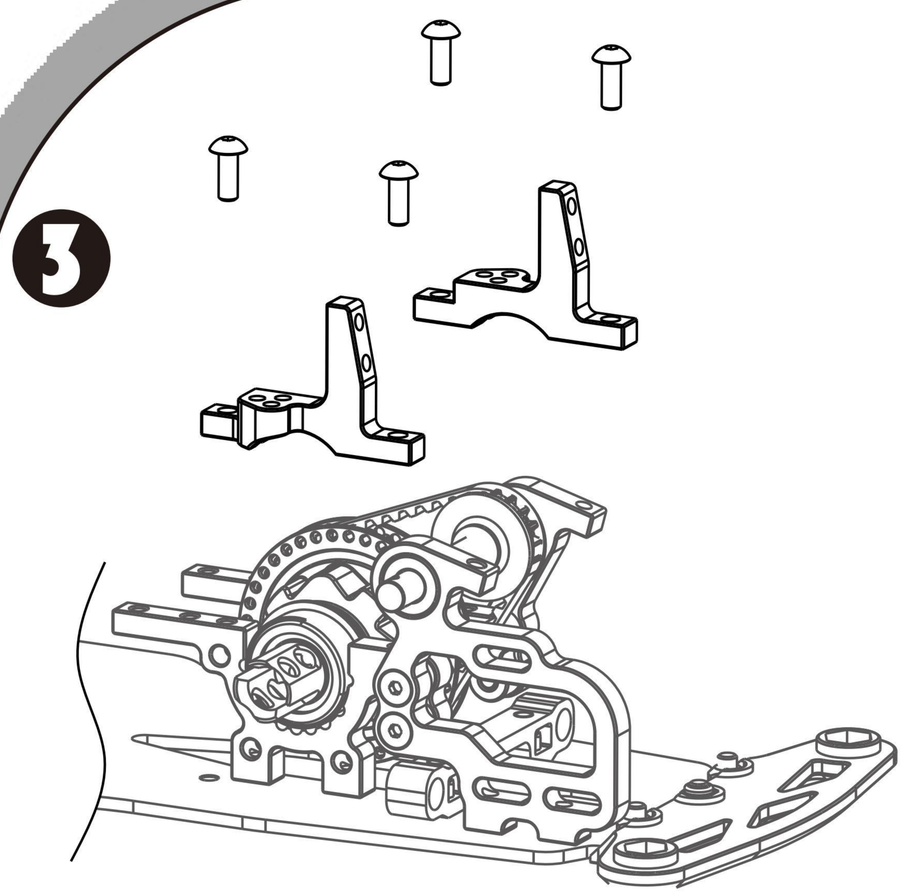
3

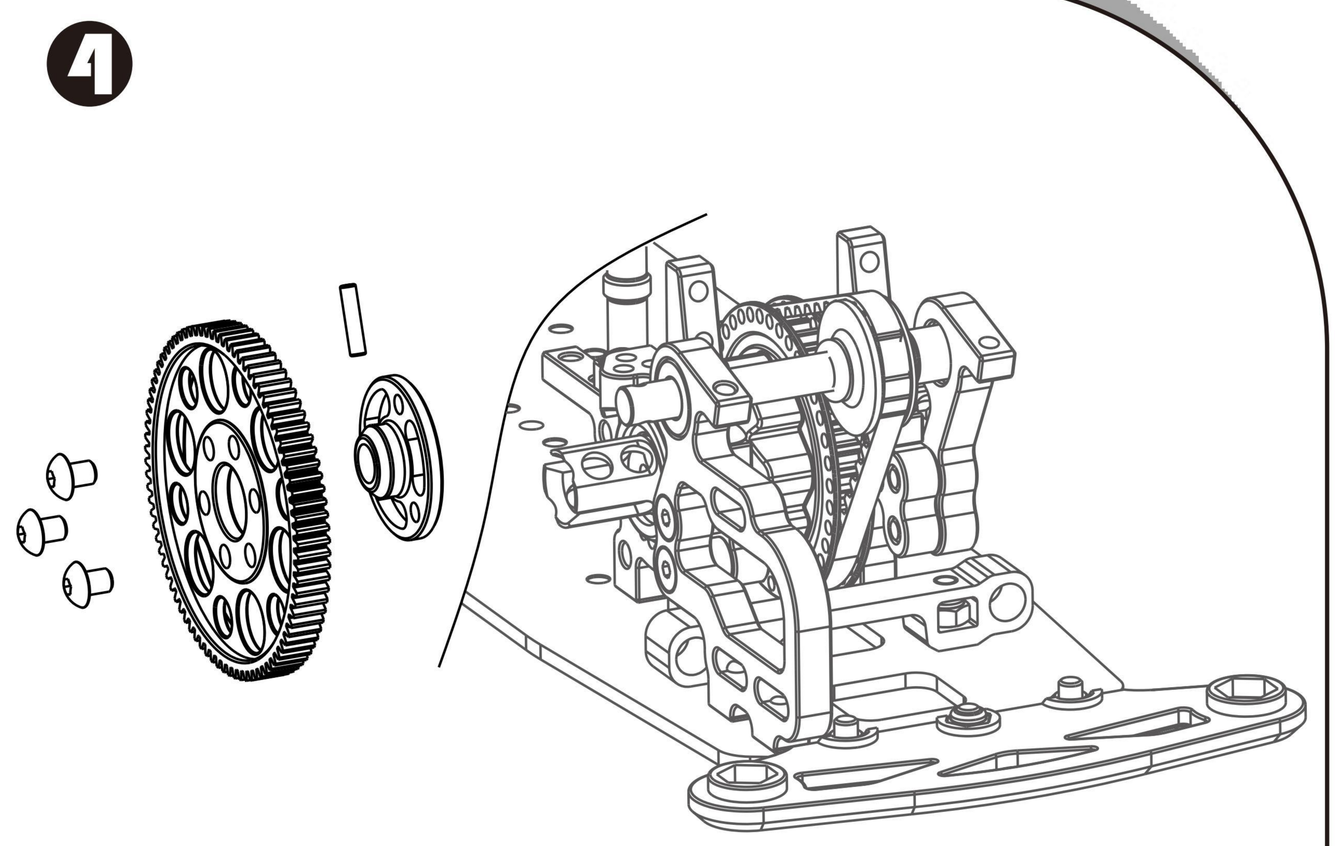
4

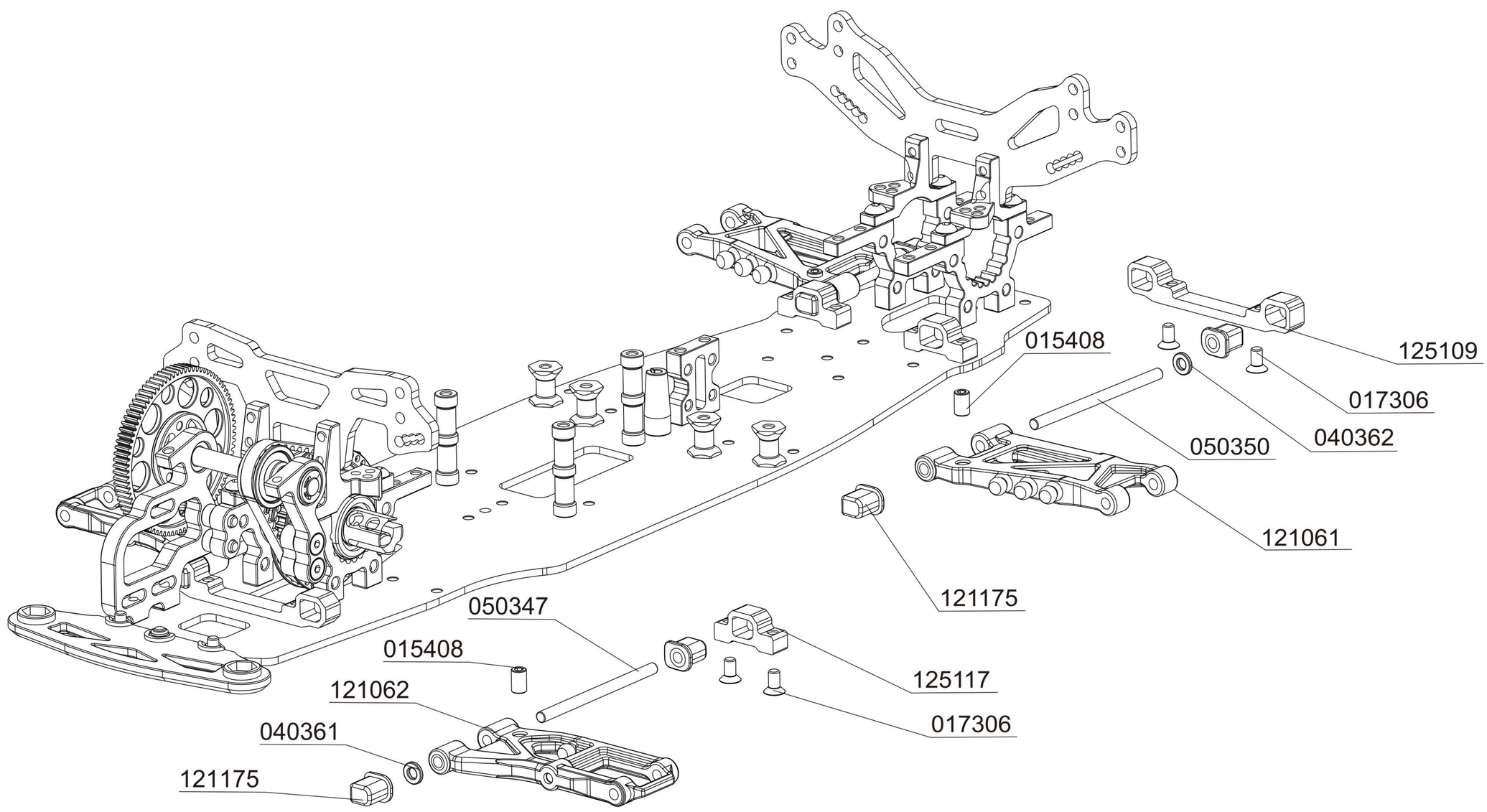
015408
125109
017306
040362
050350
121061
121175
050347
015408
121062
040361
121175
125117
017306

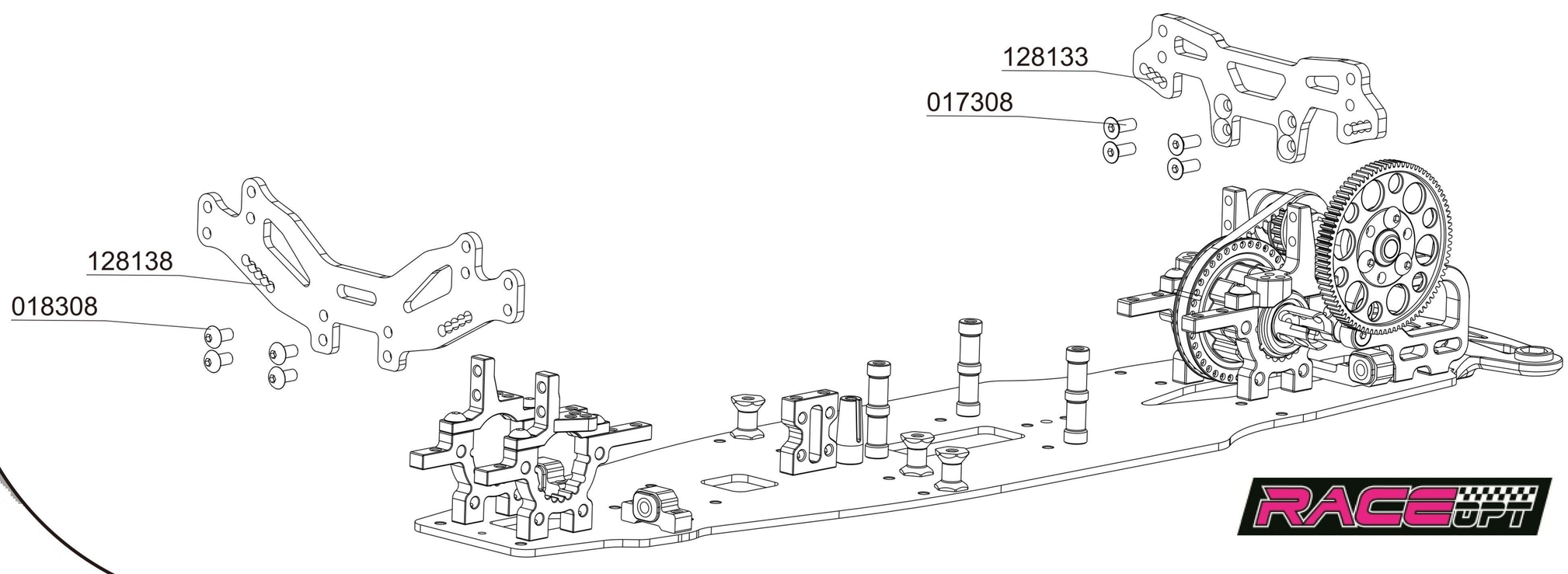
128133
017308
128138
018308

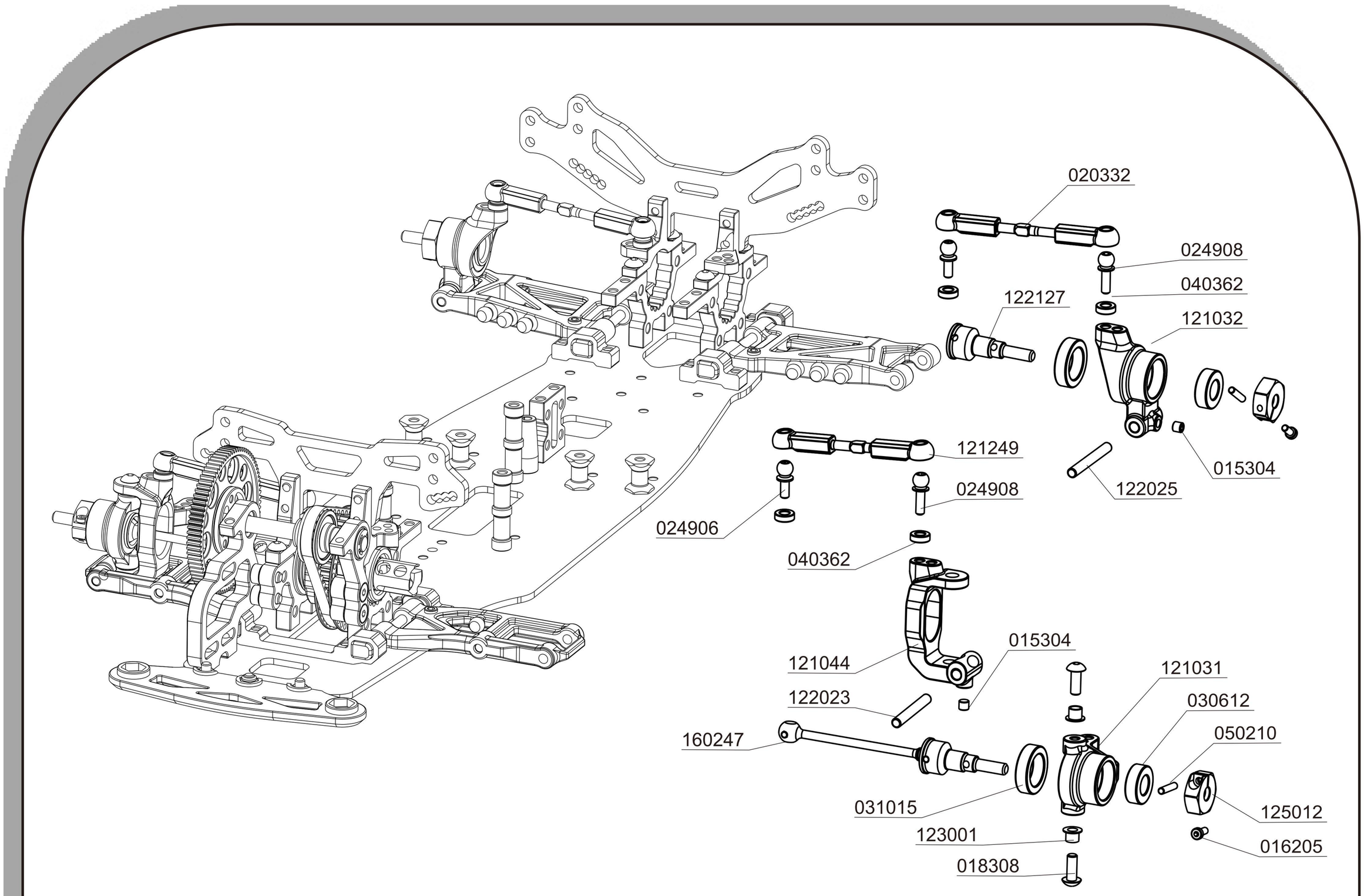

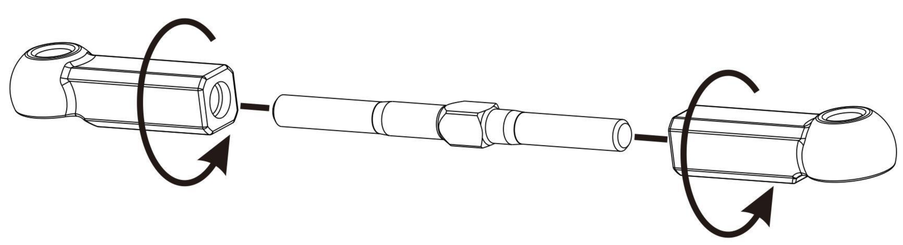

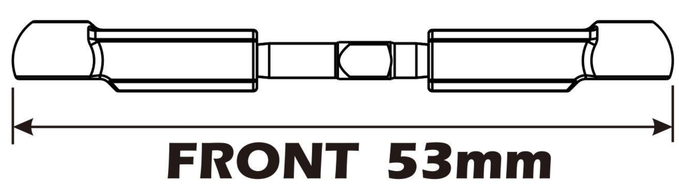

FRONT 53mm
REAR 59mm

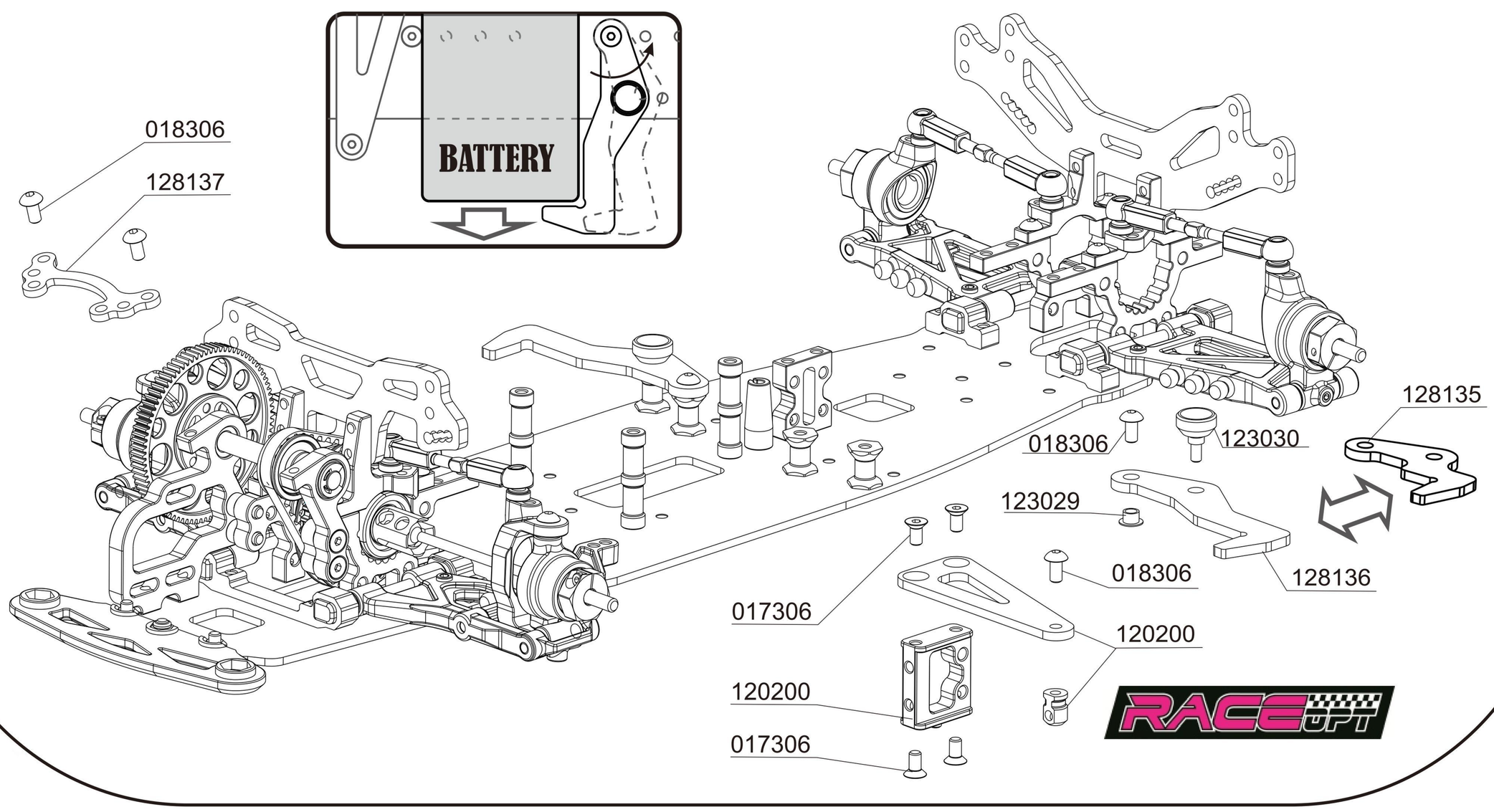

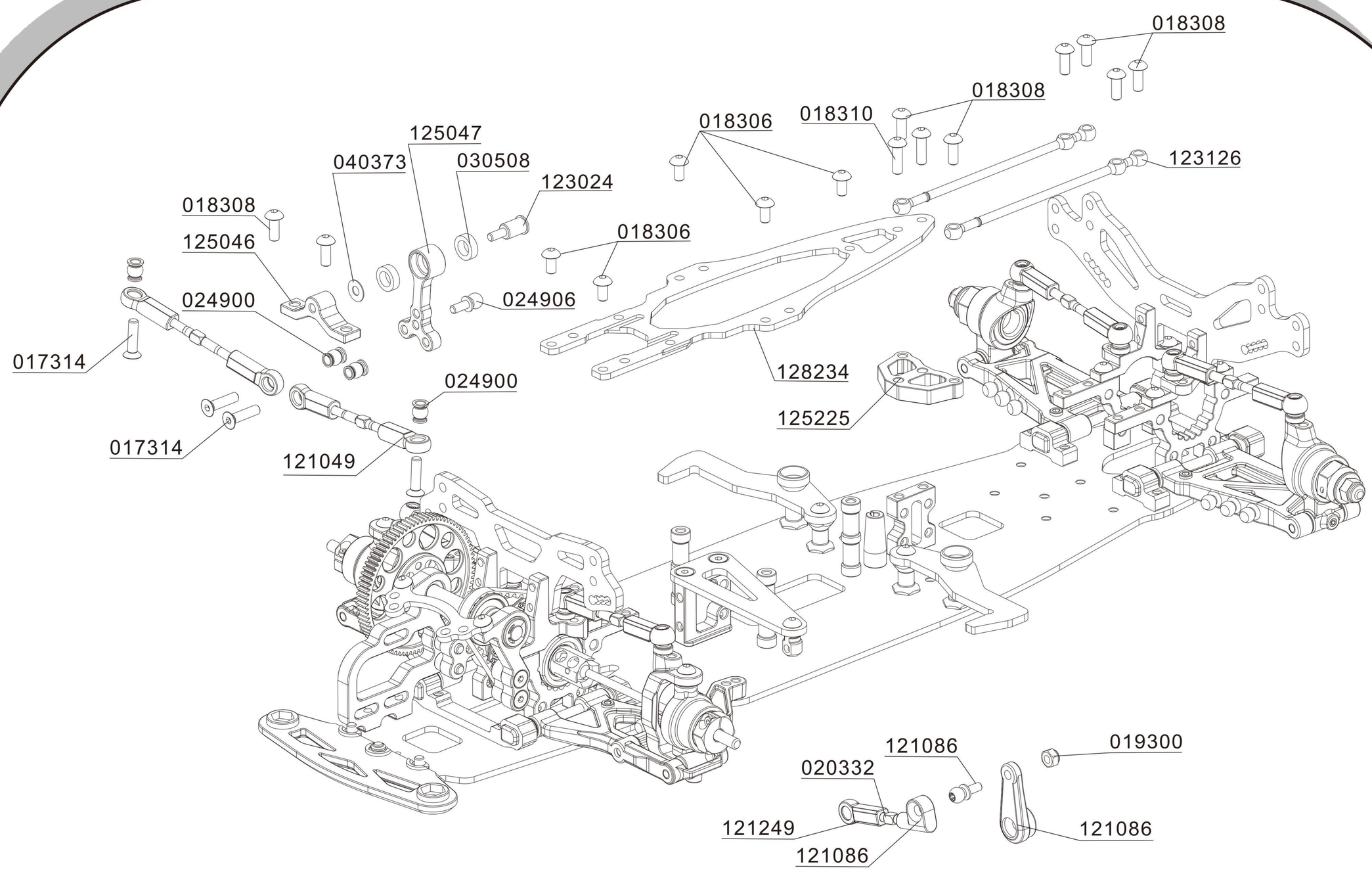
018308
018308
018306
018310
125047
040373
030508
123024
123126
018308
125046
018306
024900
024906
017314
128234
024900
125225
017314
121049
121086
019300
020332
121249
121086
121086

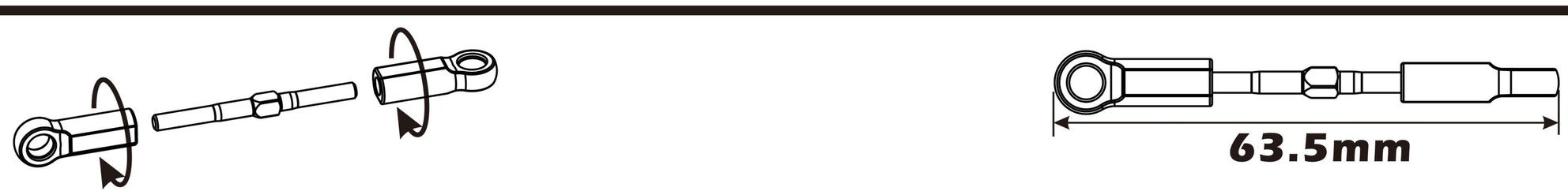
63.5mm

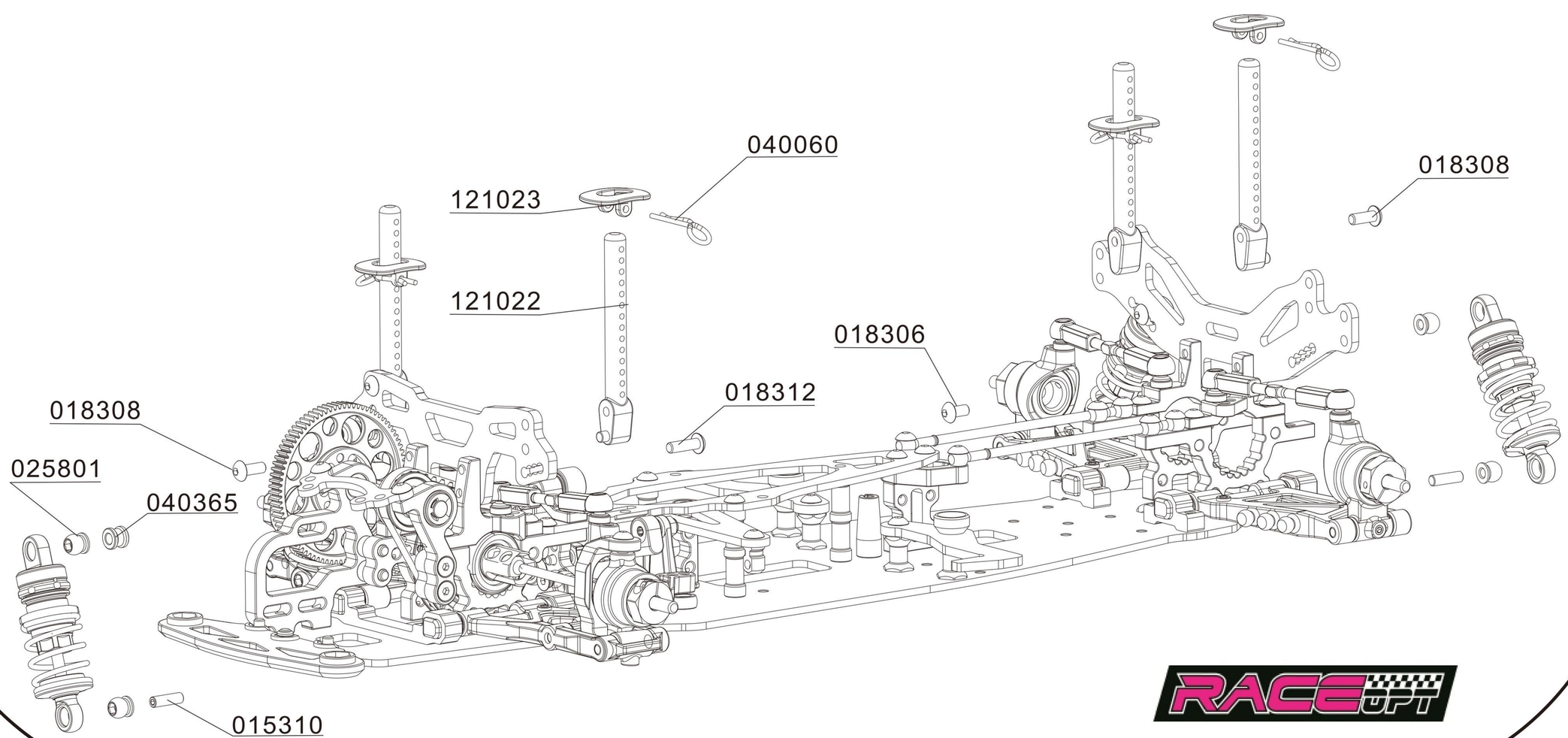
040060
121023
018308
121022
018306
018312
018308
025801
040365
015310

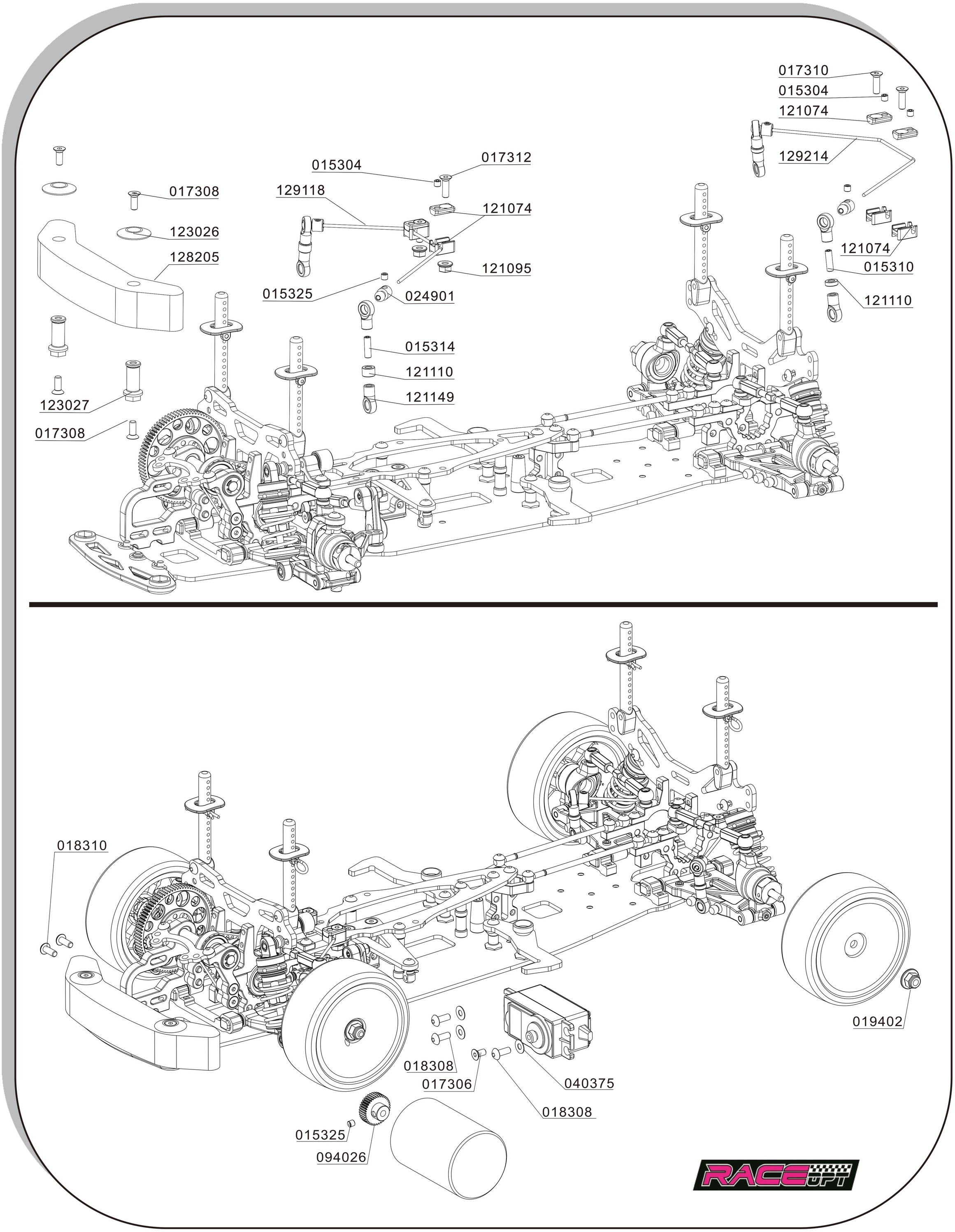
017310
015304
121074
129214
017312
015304
017308
129118
121074
123026
128205
121095
121074
015310
015325
024901
121110
015314
121110
121149
123027
017308
018310
019402
018308
017306
040375
018308
015325
094026

1/10 ELECTRIC TOURING CAR

MTS -FFV2 PRO

122127

CVD AXLE SHAFT-STRAIGHT

122006

CVD JOINT PIECE

160247

47MM

CVD DRIVE SHAFT SPRING STEEL

162147

47MM-3MM PIN

UNIVERSAL CVD DRIVE SHAFT SPRING STEEL

050347

FRONT ARM PIVOT PIN

050350

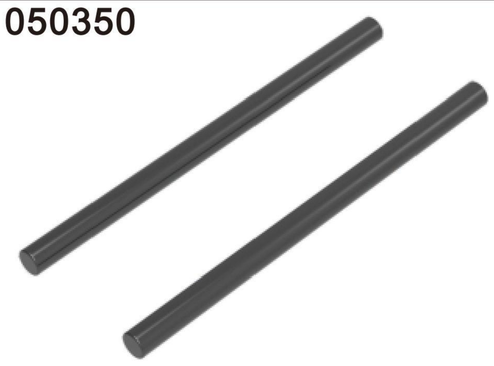

REAR SUSPENSION PIVOT PIN

122023

FRONT PIVOT PIN FOR C-HUB

122025

REAR PIVOT PIN FOR UPRIGHT

122098

DIFF. PIN

122024

HARDENED SHOCK SHAFT

020336

ADJ. TURNBUCKLE L/R 36MM-SPRING STEEL

020332

ADJ. TURNBUCKLE L/R 32MM -SPRING STEEL

123001

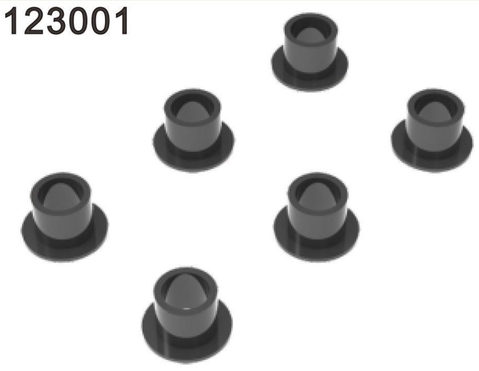

STEEL STEERING BUSHING

124000

12mm*48.5mm

ALU SHOCK ABSORBER-SET

124002

12mm

SUSPENSION NUT

124003

12mm

SUPENSION SPRING RETAINER

124019

SHOCK TUBE-HARD COATED

120052

ALU SHOCK BOTTOM CAP SET WITH ORING

125029

ALU SHOCK BOTTOM CAP

124016

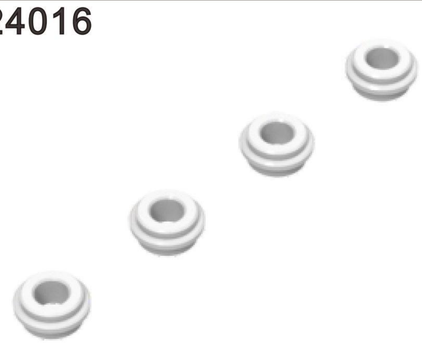

ALU SHOCK BOTTOM CAP SHIM SET

124012

ALU SHOCK SPRING RETAINING COLLAR

124119

13mm*19mm

SHOCK TUBE-HARD COATED

124102

13mm

SUSPENSION NUT

124103

13mm

SUPENSION SPRING RETAINER

RACEOPT

1/10 ELECTRIC TOURING CAR

MTS -FFV2 PRO

127002

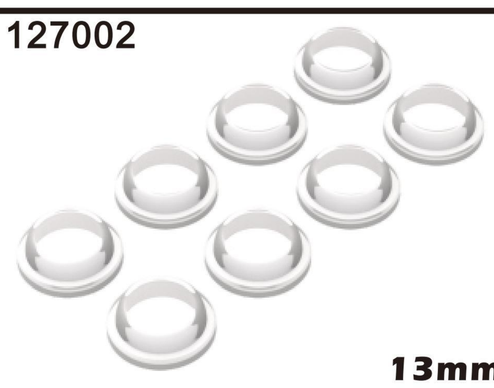

13mm

SHOCK ABSORBER MEMBRANES

061501

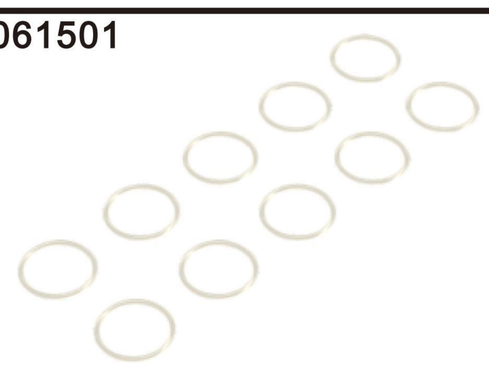

SILICONE O-RING 15X1

124132

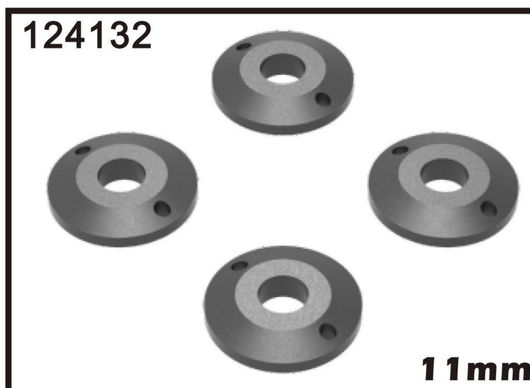

11mm

COMPOSITE PISTONS TAPERED

124133

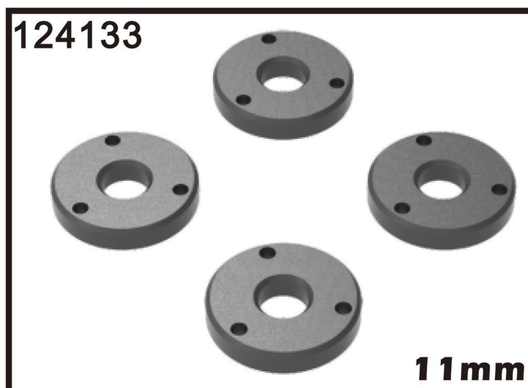

11mm

COMPOSITE PISTONS 3-HOLE

124300

13x48.5mm

ALU SHOCK ABSORBER-SET 19mm

129550

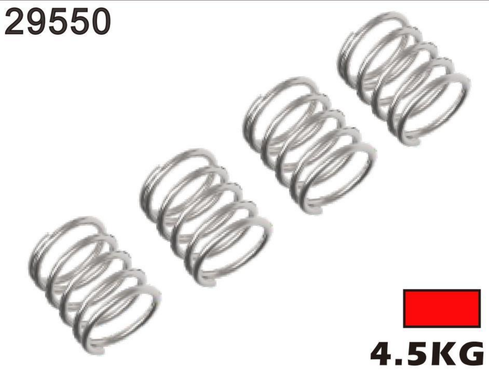

4.5KG

1.5*21*5.0 SUSPENSION SPRING RD

129555

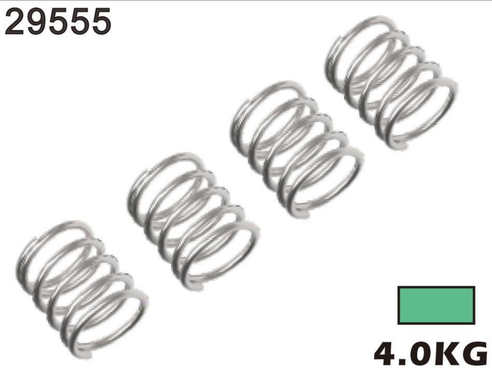

4.0KG

1.5*21*5.5 SUSPENSION SPRING SR

129560

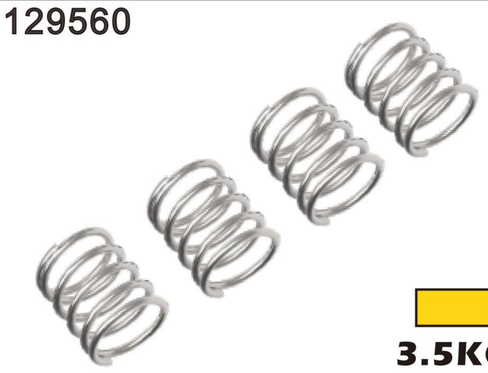

3.5KG

1.5*21*6.0 SUSPENSION SPRING YE

129565

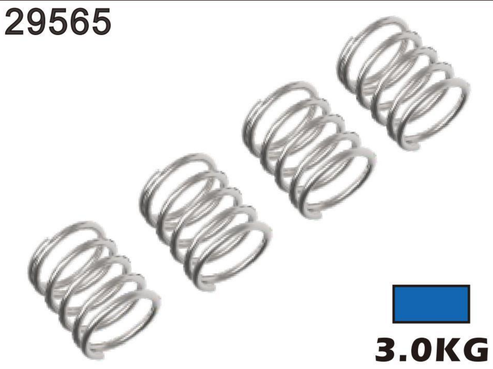

3.0KG

1.5*21*6.5SUSPENSION SPRING BL

129450

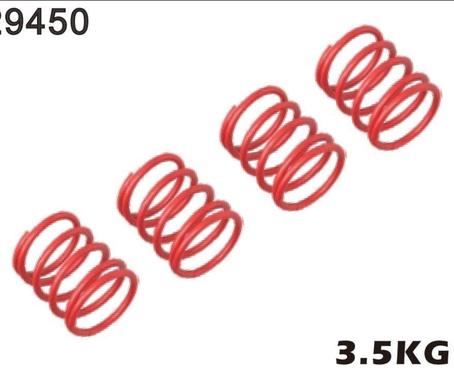

3.5KG

1.4*21*5.0 SUSPENSION SPRING RD

129455

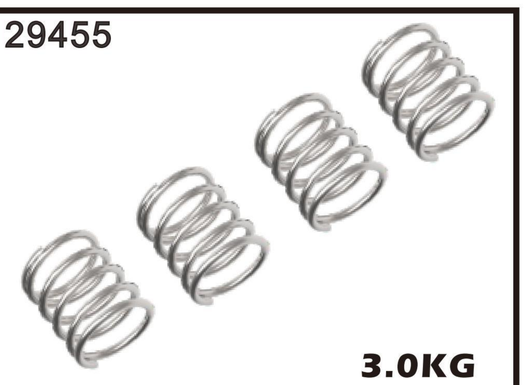

3.0KG

1.4*21*5.5 SUSPENSION SPRING SR

129460

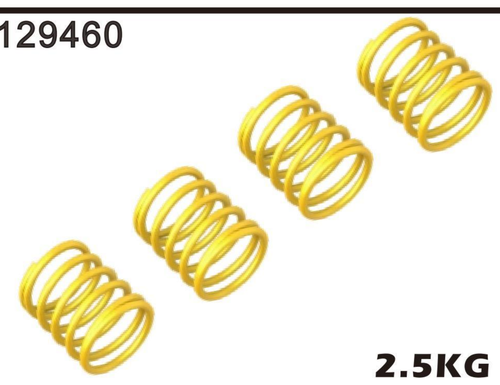

2.5KG

1.4*21*6.0 SUSPENSION SPRING YE

129465

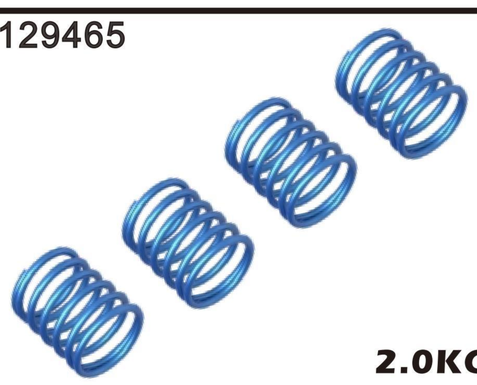

2.0KG

1.4*21*6.5SUSPENSION SPRING BL

040060

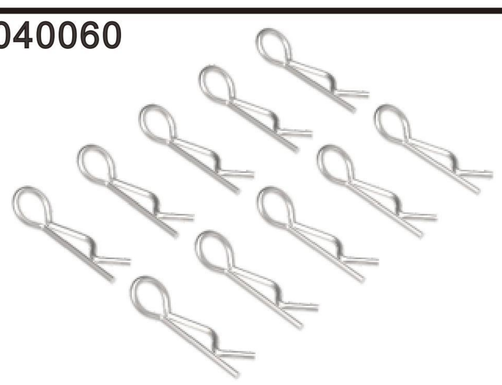

BODY CLIP

129114

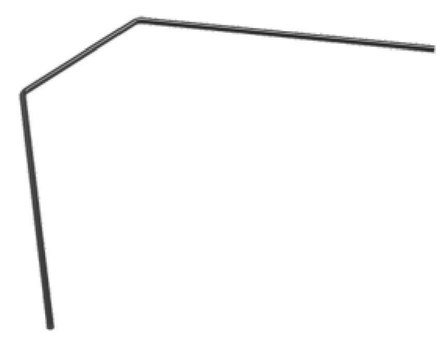

ANTI-ROLL BAR FRONT 1.4MM

129116

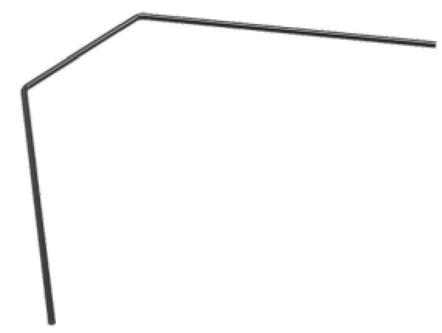

ANTI-ROLL BAR FRONT 1.6MM

129118

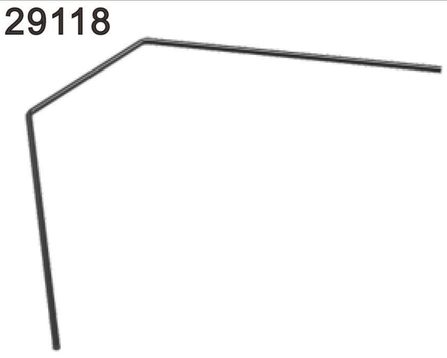

ANTI-ROLL BAR FRONT 1.8MM

129212

ANTI-ROLL BAR REAR 1.2MM

129214

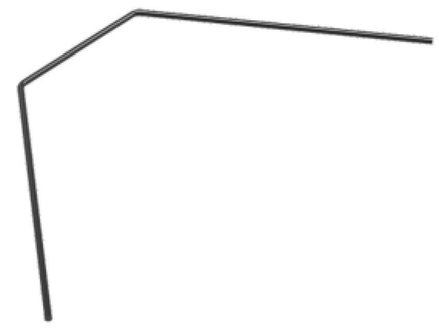

ANTI-ROLL BAR REAR 1.4MM

129216

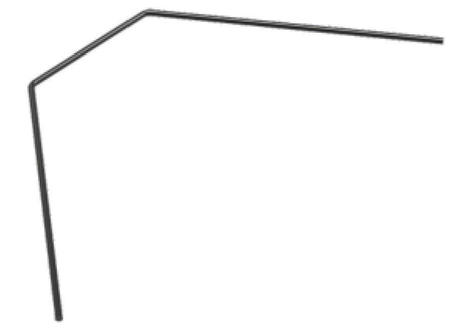

ANTI-ROLL BAR REAR 1.6MM

163130

3.1 S2

UNIVERSAL CVD DRIVE SHAFT-STEEL

163131

3.1 S2

FRONT SOLID AXLE SPOOL OUTDRIVE- SPRING STEEL

160131

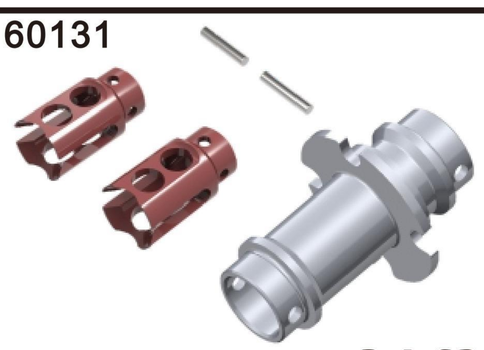

3.1 S2

FRONT SOLID AXLE SET-SPRING STEEL

125019

FRONT SOLID AXLE

RACEOPT

1/10 ELECTRIC TOURING CAR

MTS -FFV2 PRO

123204

ONE WAY SOLID AXLE OUTDRIVE-SPRING STEEL

120204

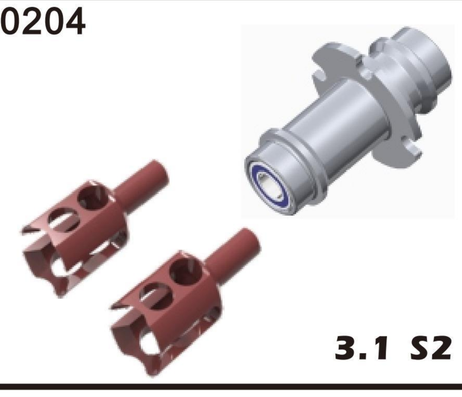

ONE WAY SOLID AXLE SET-SPRING STEEL OUTDRIVE

024900

PIVOT BALL 4.9MM DOUBLE BELVE SHOULDERS

024901

4.9MM TRIPPING BALL HEAD-STEEL

024902

TRIPPING BALL HEAD-4.9MM ALU.

024904

BALL END 4.9MM WITH THREAD 4MM

024906

BALL END 4.9MM WITH THREAD 6MM

024908

BALL END 4.9MM WITH THREAD 8MM

024910

BALL END 4.9MM WITH THREAD 10MM

025800

BALL UNIVERSAL 5.8MM HEX

025801

BALL UNIVERSAL 5.8MM HEX

025806

BALL END 5.8MM WITH THREAD 6MM

025808

BALL END 5.8MM WITH THREAD 8MM

125001

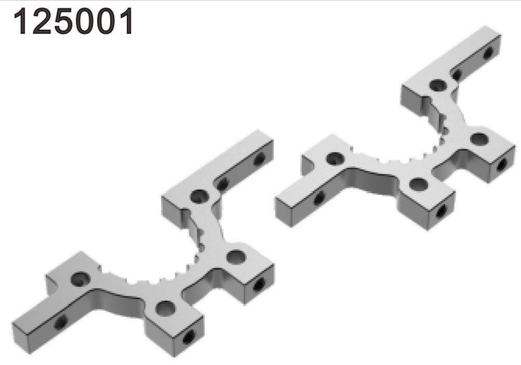

ALU LOWER SUSP. ADJUST. BULKHEAD

125004

BEARING SLEEVE CLAMP -GT CAR -(L+R)

125012

OPTION ALU WHEEL HUB

090111

PLANETARY GEAR SET - HARD COATED

090110

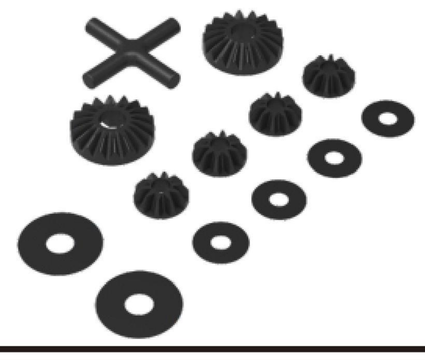

PLANETARY GEAR SET - PLASTIC

060702

SILICONE O-RING 7X2

060902

SILICONE O-RING 9X2

061401

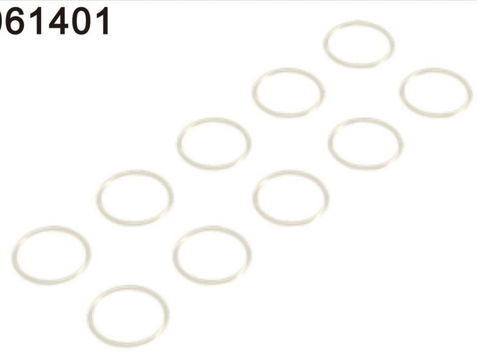

SILICONE O-RING 14X1

060615

SILICONE O-RING 6X1.5

127001

SHOCK ABSORBER MEMBRANES

128202

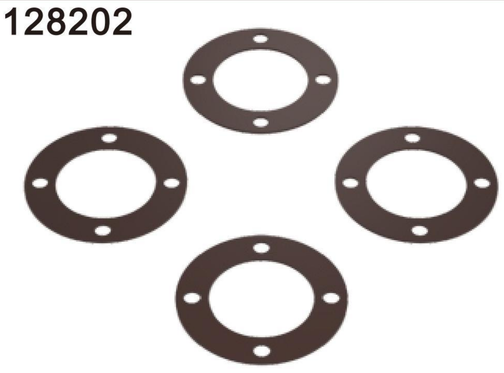

DIFF GASKEL

RACE OPT

128115

GRAPHITE FLOATING SERVO MOUNT PLATE

120200

OPTIONAL FLOATING SERVO MOUNT

120081
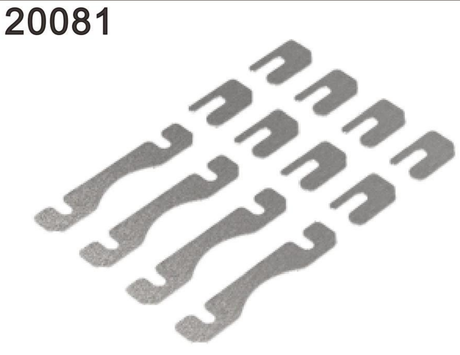
FRONT/REAR SUSPENSION SHIM SET 0.5mm

121014

COMPOSITE BUMPER

121022

REAR BODY MOUNT SET

121023

BODY SUPPORT

161024

REAR BODY MOUNT SET

121031

COMPOSITE STEERING BLOCK

121032

COMPOSITE UPRIGHT REAR

121042

COMPOSITE C-HUB FRONT BLOCK 2 DEG

121044

COMPOSITE C-HUB FRONT BLOCK 4DEG

121061

REAR SUSPENSION ARM

121062

FRONT SUSPENSION ARM

121063
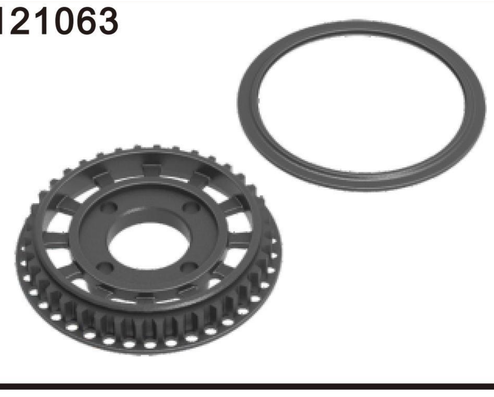
TIMING BELT PULLEY 38T

121068-WH
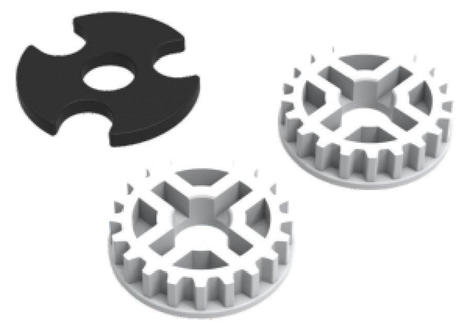
FIXED PULLEY 18T (POM)

121068

FIXED PULLEY 18T

121065-WH
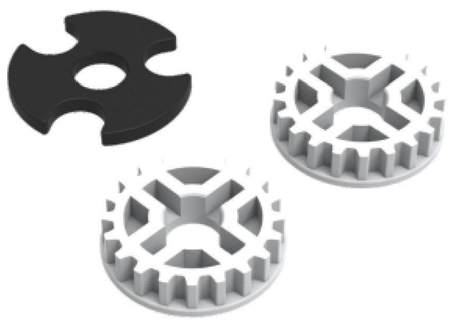
FIXED PULLEY 20T (POM)

121065

FIXED PULLEY 20T

121067
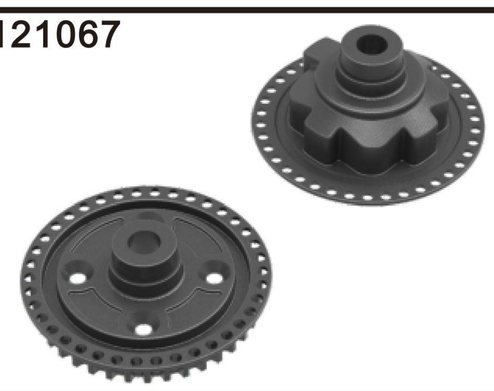
COMPOSITE GEAR DIFF. CASE & COVER

121074
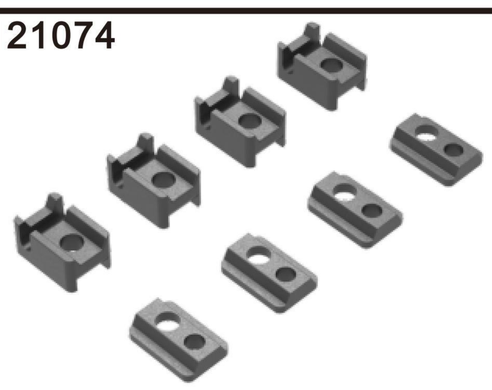
COMPOSITE ANTI-ROLL BAR HOLDERS

121095
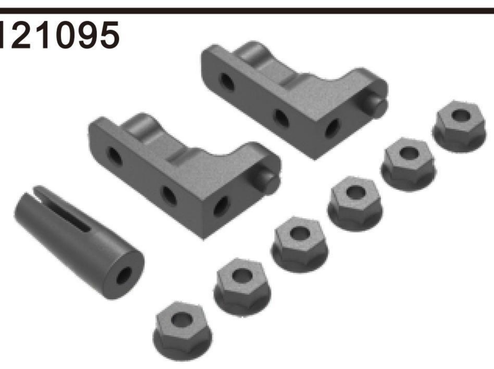
STEERING PILLAR SUITE

121096

COMPOSITEADJUSTMNET BALL-BEARING HUB

124001
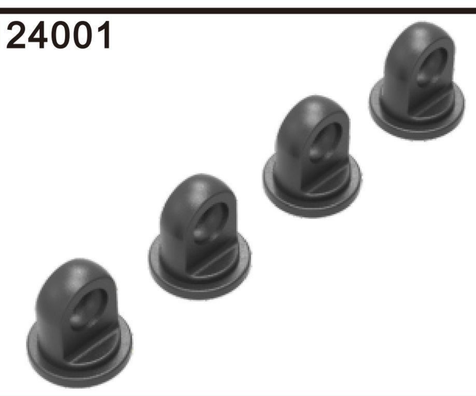
SHOCK CAP

1/10 ELECTRIC TOURING CAR

124032

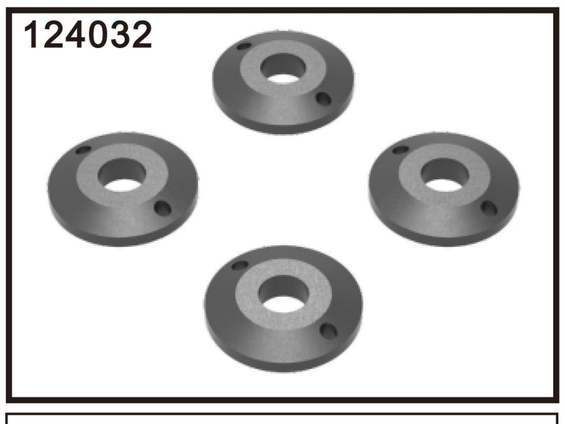

COMPOSITE PISTONS TAPERED

124033

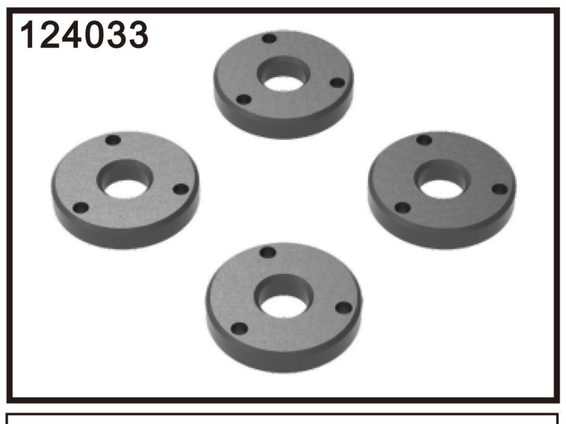

COMPOSITE PISTONS 3-HOLE

121049

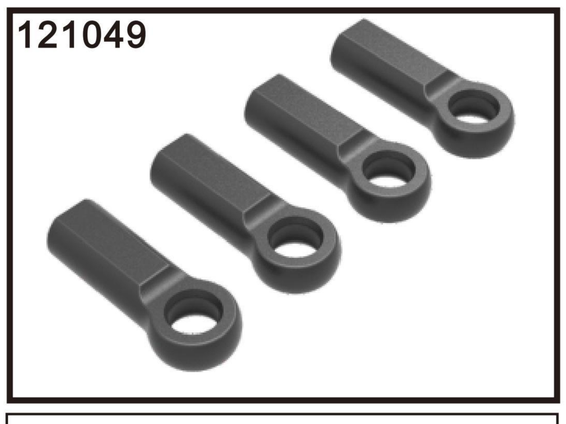

COMPOSITE BALL JOINT 4.9MM OPEN

121058

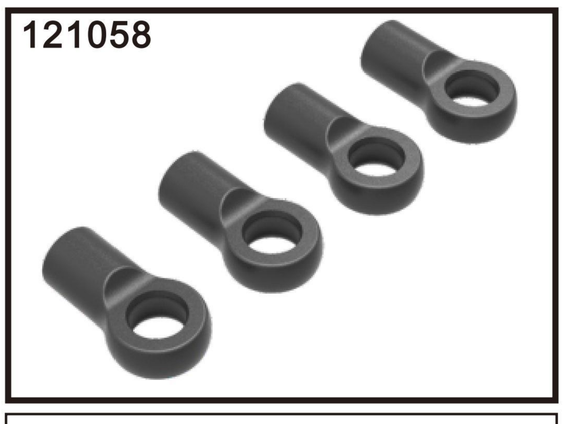

SHOCK BALL JOINT

121149

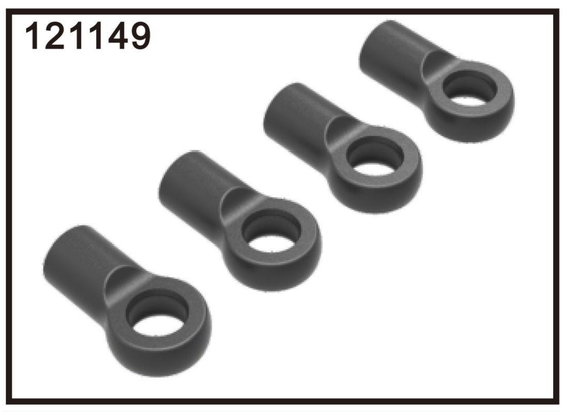

BALL JOINT 5MM-SHORT OPEN

121249

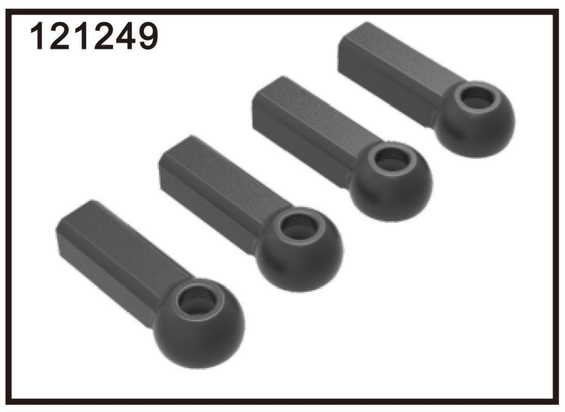

COMPOSITE BALL JOINT 4.9MM- CLOSEDWITH HOLE

121110

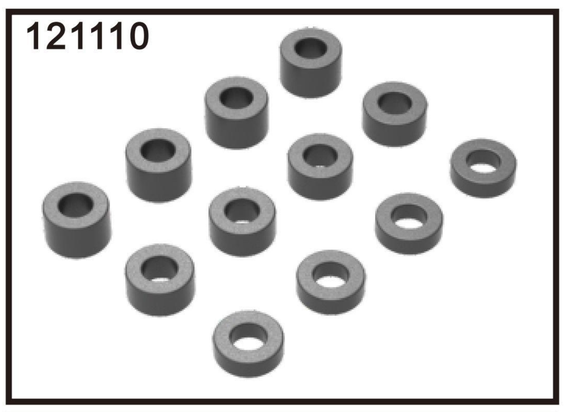

COMPOSITE SHIM

094084

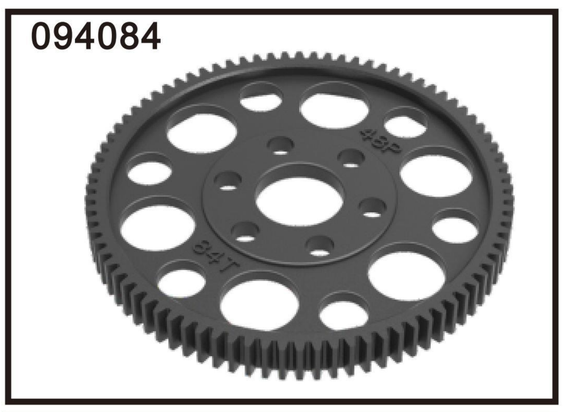

SPUR GEAR 84T/48P

096110

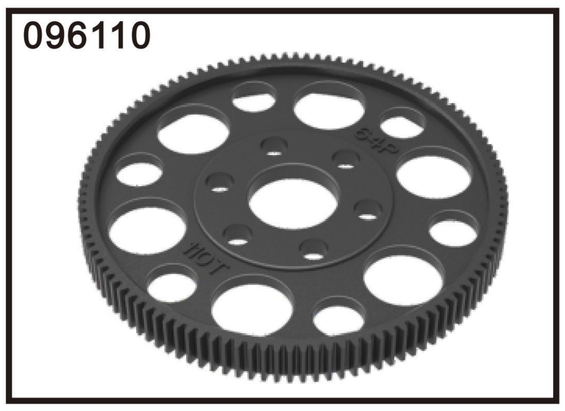

SPUR GEAR 110T/64P

094084-WH

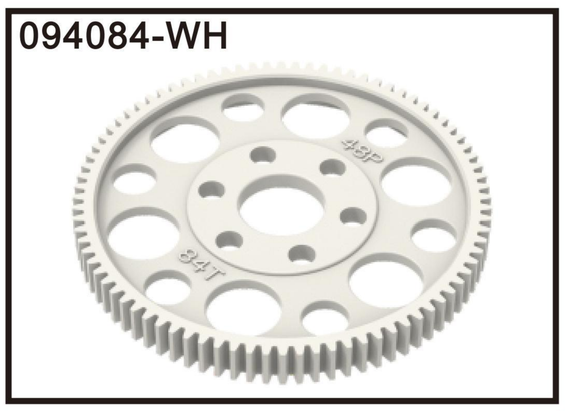

SPUR GEAR 84T/48P POM

096110-WH

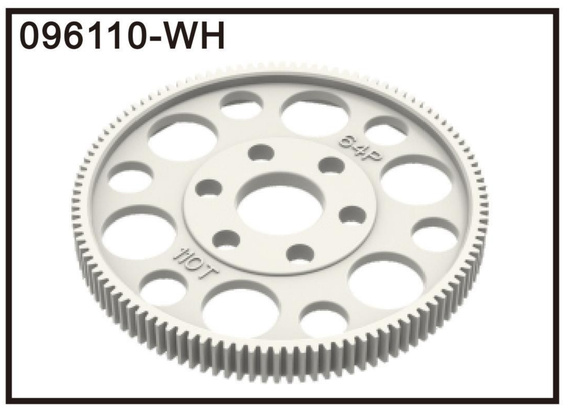

SPUR GEAR 110T/64P POM

094072

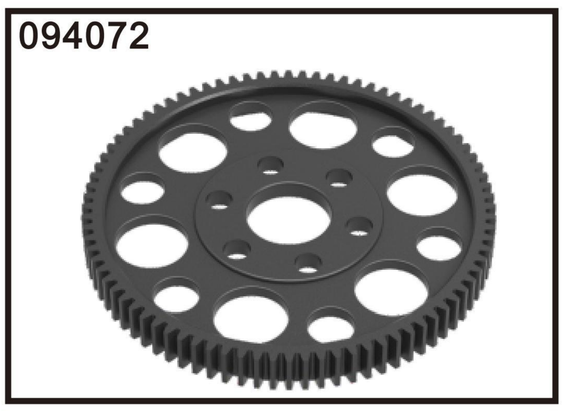

SPUR GEAR 72T/48P

127611

TYRE

127612

TYRE

127624

SLICK TYRE 24 DEGREE

127628

SLICK TYRE 26 DEGREE

127632

SLICK TYRE 28 DEGREE

127636

SLICK TYRE 36 DEGREE

127640

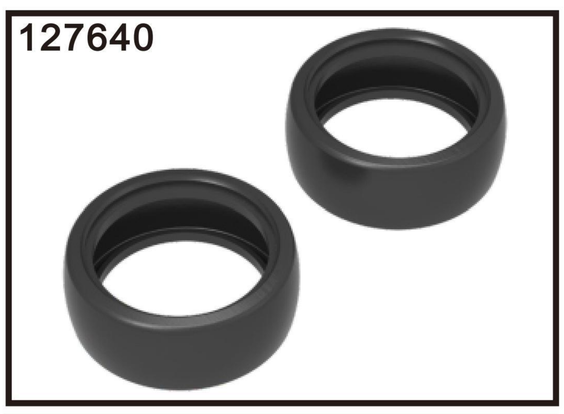

SLICK TYRE 40 DEGREE

127601

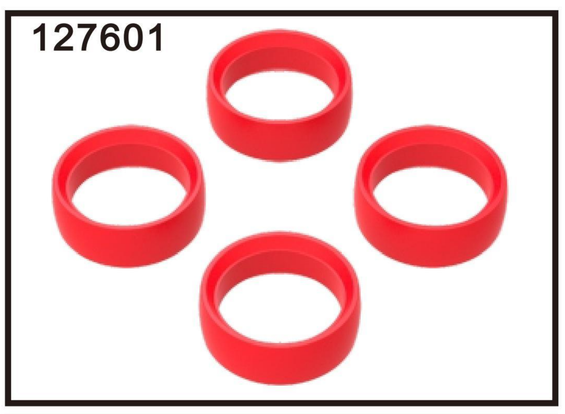

PU Insert (SOFF)

127602

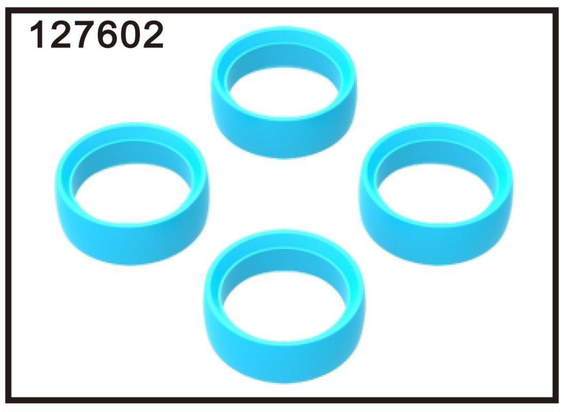

PU INSERT (HARD)

121601

WHEEL RIM

121602

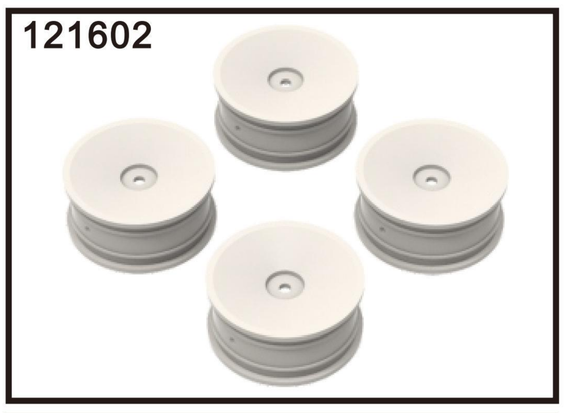

WHEELS RIM

127662

SLICK TYRE SET

1/10 ELECTRIC TOURING CAR

-FFV2 PRO

127663

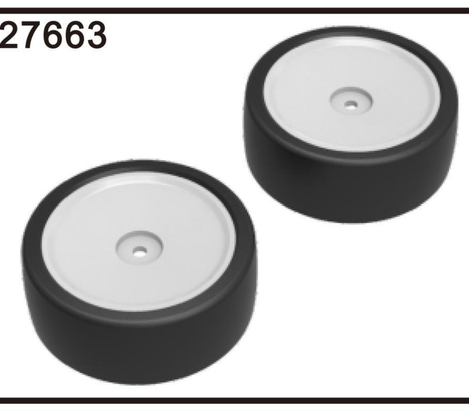

SLICK TYRE SET

094018 18T
094019 19T
094020 20T
094021 21T
094022 22T
094023 23T
094024 24T
094025 25T
094026 26T
094027 27T
094028 28T
094029 29T
094030 30T

PINON GEAR ALU HARD COATED(48P)

096024 24T
096025 25T
096026 26T
096027 27T
096028 28T
096029 29T
096030 30T
096031 31T
096032 32T
096033 33T
096034 34T
096035 35T
096036 36T
096037 37T
096038 38T
096039 39T
096040 40T
096041 41T
096042 42T
096043 43T
096044 44T
096045 45T

PINON GEAR ALU HARD COATED(64P)

161113

GEAR DIFFERENTIAL - SET

161112

METAL GEAR

OPTIONAL GEAR DIFFERENTIAL - SET

125041

ALU. UPPER CLAMP WITH ROLLING CENTER ADJ.(L)

125042

ALU. UPPER CLAMP WITH ROLLING CENTER ADJ.(R)

125043

ALU. BULKHEAD

125044

ALU. MOTOR MOUNT PLATE

125045

ALU. SPUR GEAR SHAFT MOUNT

125046

ALU. STEERING MOUNT HOLDER

125047

ALU. STEERING PLATE

125224

Alu. Chassis Center Mount

125225

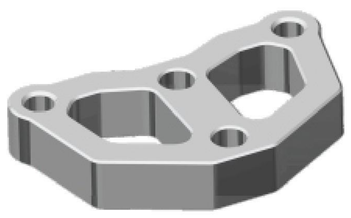

Anti-Twist Bar Holder

128232

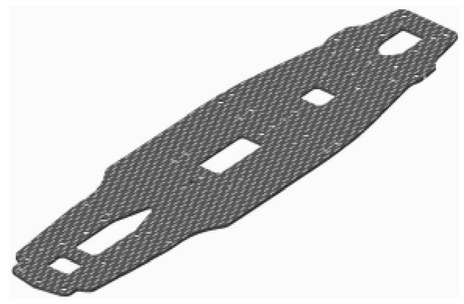

GRAPHITE

CHASSIS

128133

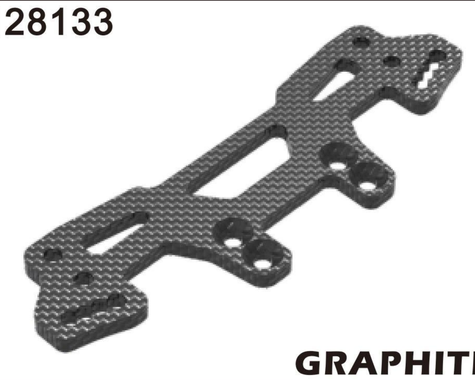

GRAPHITE

FRONT SHOCK TOWER

128234

GRAPHITE

UPPER DECK

128135

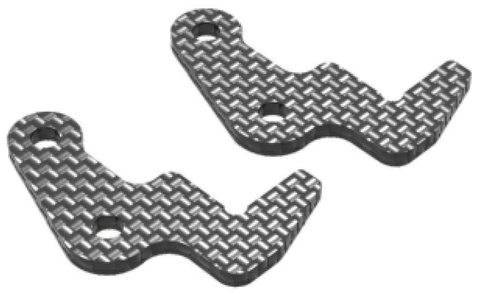

GRAPHITE

BATTERY HOLDER PLATE 96

128136

GRAPHITE

BATTERY HOLDER PLATE 139

128137

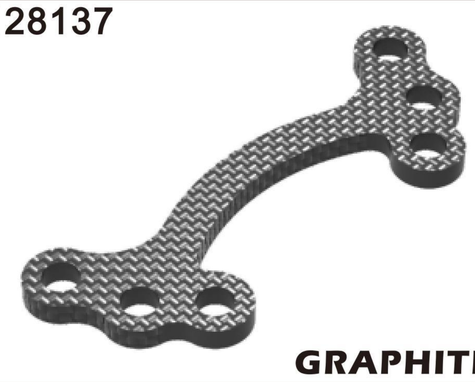

GRAPHITE

FAN MOUNT HOLDER

128237

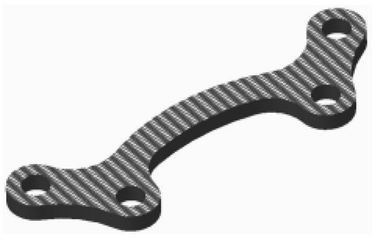

GRAPHITE

FAN MOUNT HOLDER 30MM

128138

GRAPHITE

REAR SHOCK TOWER

123021

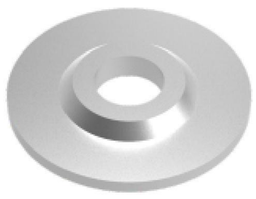

PULLEY HOLDER COLLAR

123022

ALU. FRONT PULLEY SHAFT

1/10 ELECTRIC TOURING CAR

MTS -FFV2 PRO

123023

ALU. SPUR GEAR HOLDER

123024

ALU. STEERING SHAFT

123025

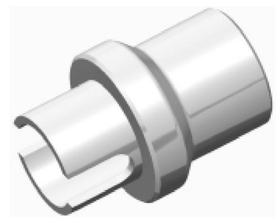

ALU. FRONT PULLEY SHAFT HOLDER

123026

BUMPER HOLDER COLLAR

123027

BUMPER STANDOFF POST

123028

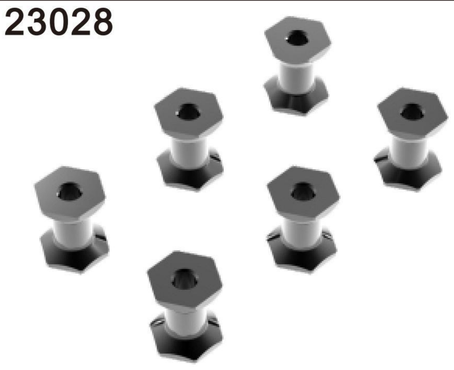

ALU. BATTERY STANDOFF POST

123029

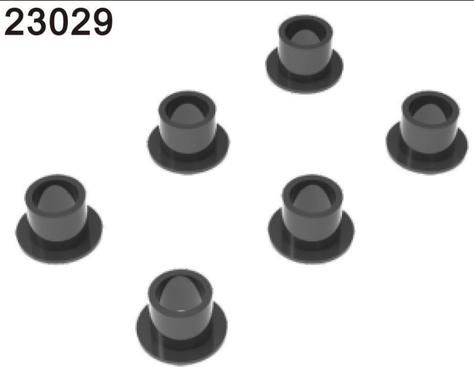

BATTERY MOUNT SCREW BUSHING

123030

BATTERY MOUNT HANDLER

123031

ALU. CHASSIS STANDOFF POST

123032

COMPOSITE ANTI-ROLL BAR HOLDER

123033

BUMPER HEX SCREW

121086

SERVO MOUNT SET

094072

SPUR GEAR 72T/48P

127050

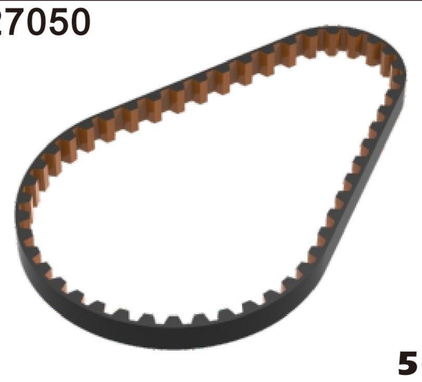

50T

SYNCHRONOUS BELT SHORT

127250

50T-PU

SYNCHRONOUS BELT SHORT

128205

FOAM BUMPER

128009 2.2
128109 2.5
128209 3.0

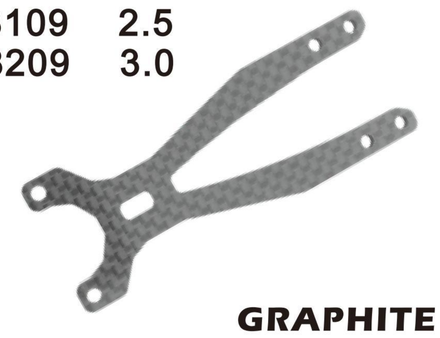

GRAPHITE

Anti-Twist Rear Upper Deck Graphite

125106

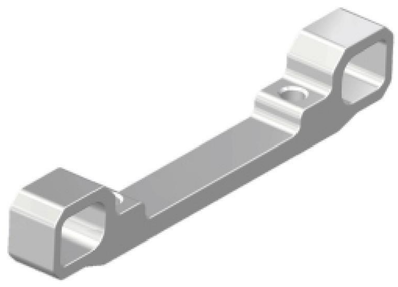

LOWER SUSPENSION HOLDER(FF)

125109

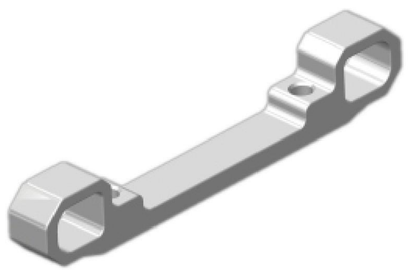

LOWER SUSPENSION HOLDER(RR)

125117

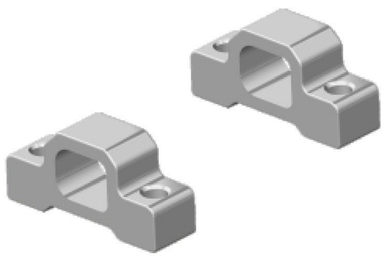

LOWER SUSPENSION HOLDER(FR-RF)

123124

Anti-Twist Bar 2.4mm

123126

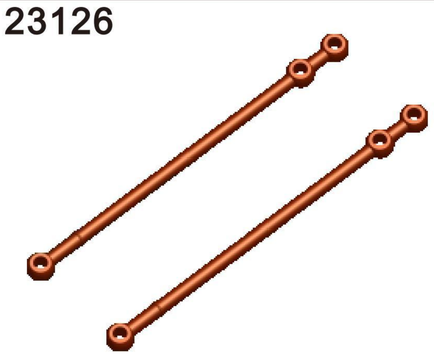

Anti-Twist Bar 2.6mm

123128

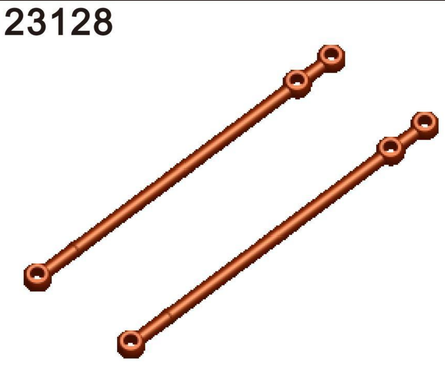

Anti-Twist Bar 2.8mm

124249

12mm*49mm

Reduced Air Shocker (49mm)

RACE OPT

1/10 ELECTRIC TOURING CAR

-FFV2 PRO

124257

Reduced Air Shocker (57mm)

124201

RAS- Shock Cap

124239

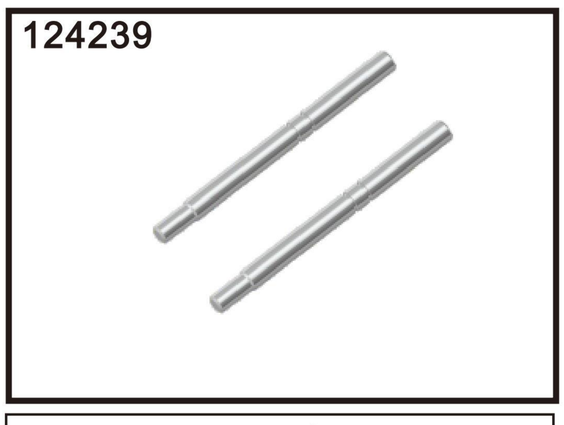

RAS-Shock Shaft 3x39mm

124247

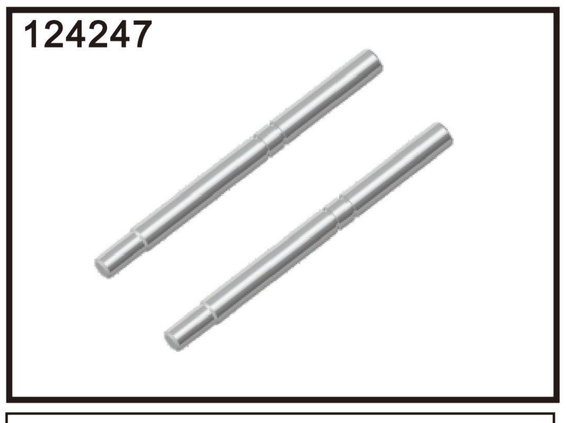

RAS-Shock Shaft 3x47mm

124318

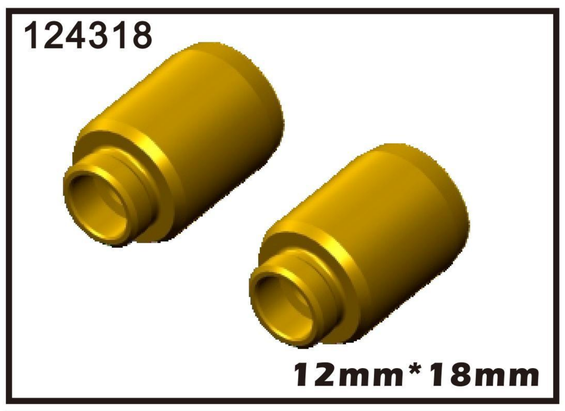

RAS-Shock Body 12x18mm

124322

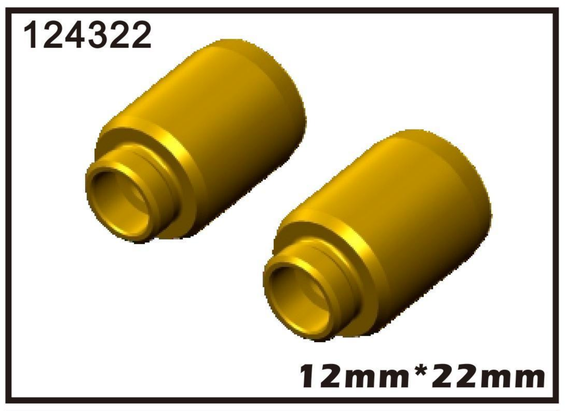

RAS-Shock Body 12x22mm

124403

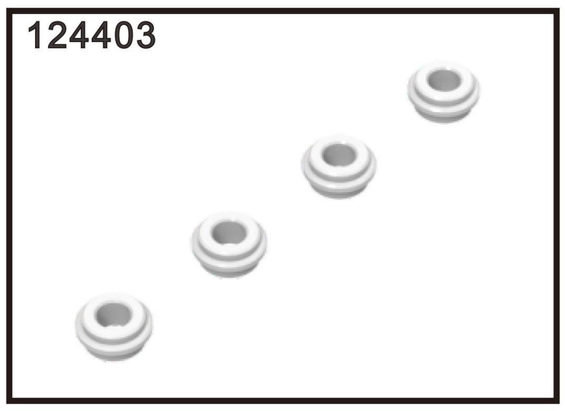

RAS-Shock Bottom Cover

124430

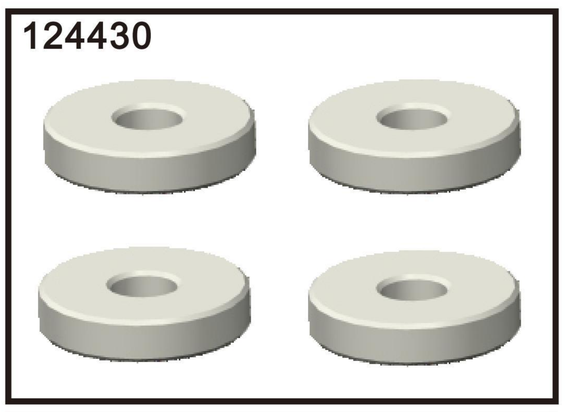

RAS-Shock Piston (without hole)

124431

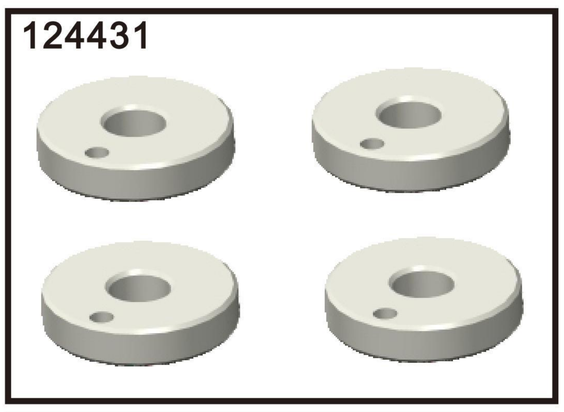

RAS-Shock Piston (1 hole)

124432

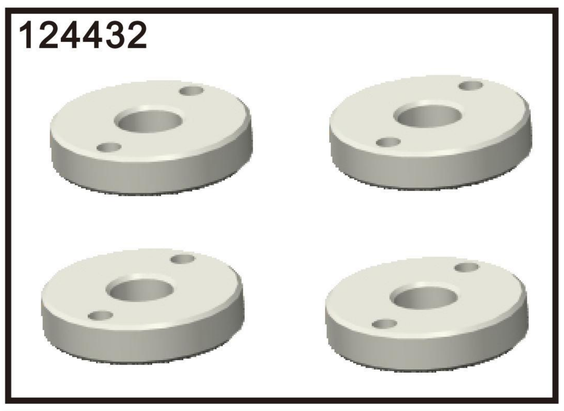

RAS-Shock Piston (2 hole)

124433

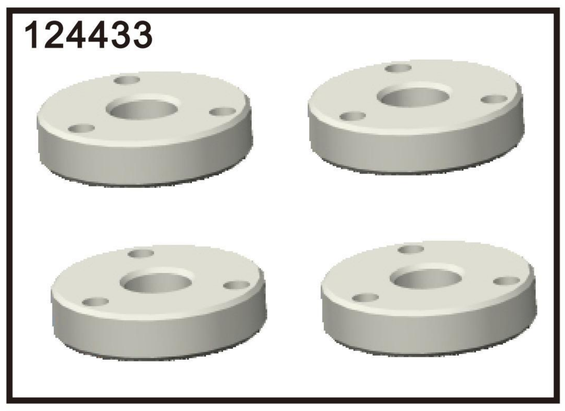

RAS-Shock Piston (3 hole)

124402

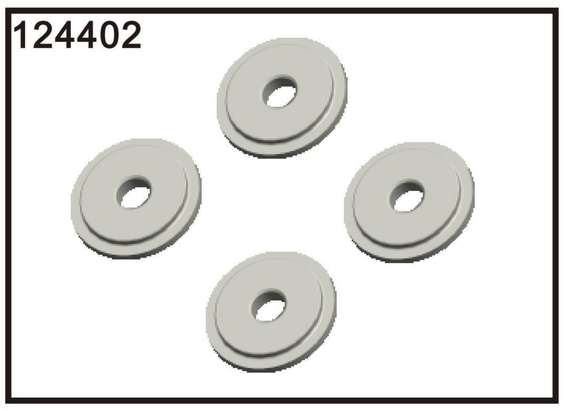

RAS-Shock Top Cover

124211

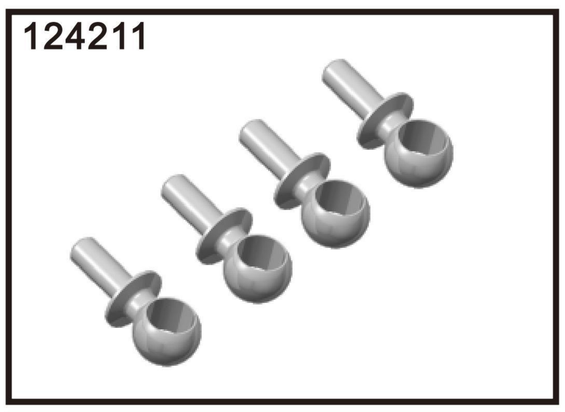

RAS-Shock Cap Ball End 5.9mm

124501

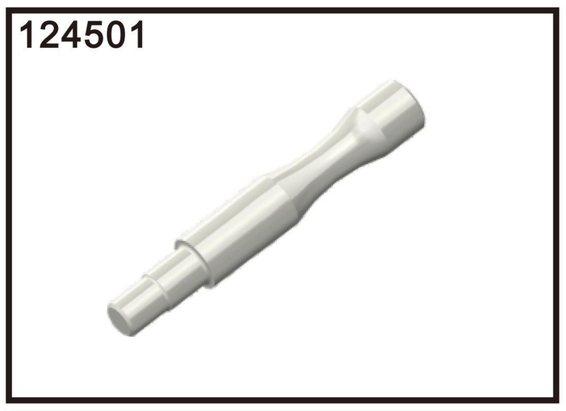

RAS-Shock Holder Tool

061301

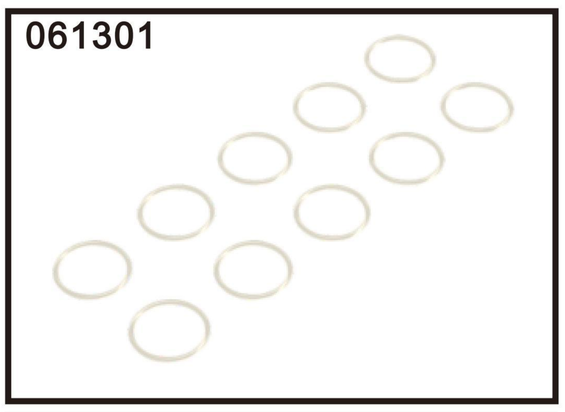

RAS-Shock Upper O-ring (13x1mm)

121175

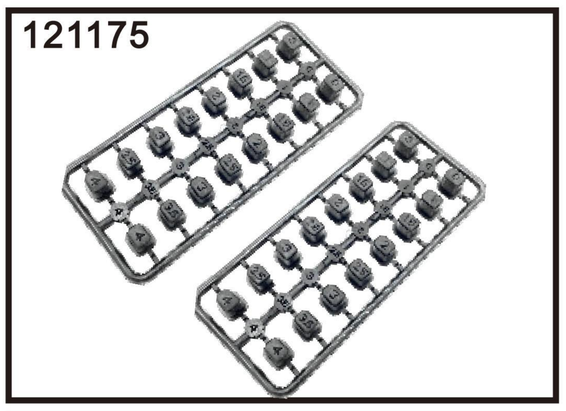

Suspension Mount Insert

016205

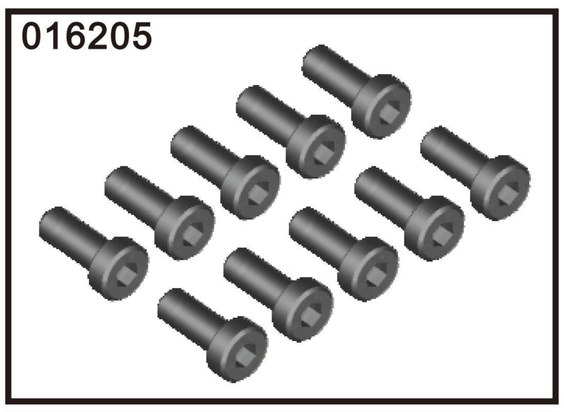

HEX SOCKET CAP SCREWS M2X5

015325 M3*2.5
015304 M3*4
015310 M3*10
015314 M3*14
015408 M4*8

HEX SET SCREW

018258 M2.5*8
018306 M3*6
018308 M3*8
018310 M3*10
018312 M3*12
018414 M4*14

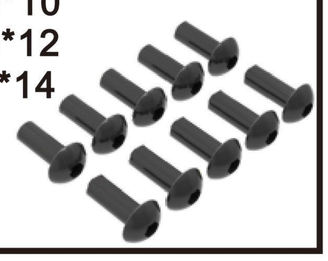

HEX SCREW ROUND HEAD M3X8

017210 M2*10
018256 M2.5*6
018304 M3*4
018305 M3*5
018306 M3*6
018308 M3*8
018310 M3*10
018312 M3*12
018414 M4*14
018416 M4*16

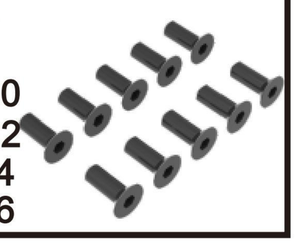

HEX SCREW FALT HEAD M3X8

R030508

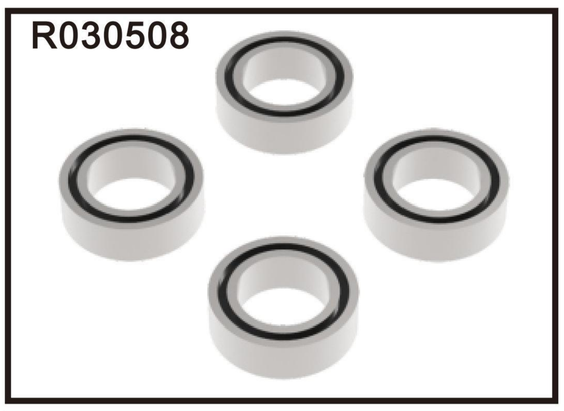

BALL-BEARING 5X8X2.5

030510

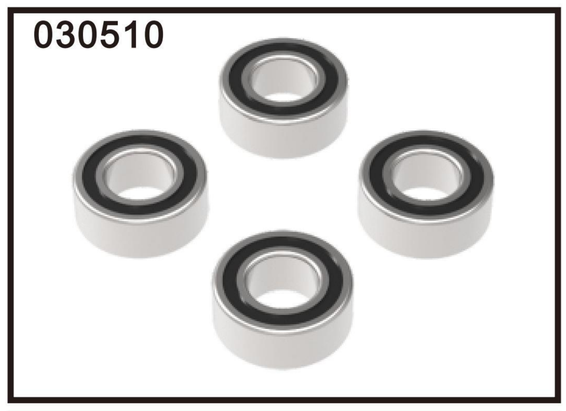

BALL-BEARING 5X10X4

030612

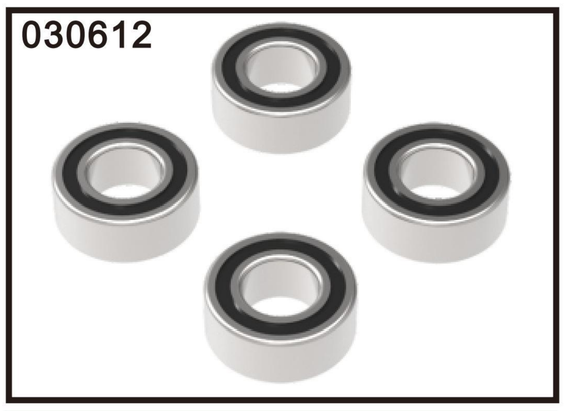

BALL-BEARING 6X12X4

031015

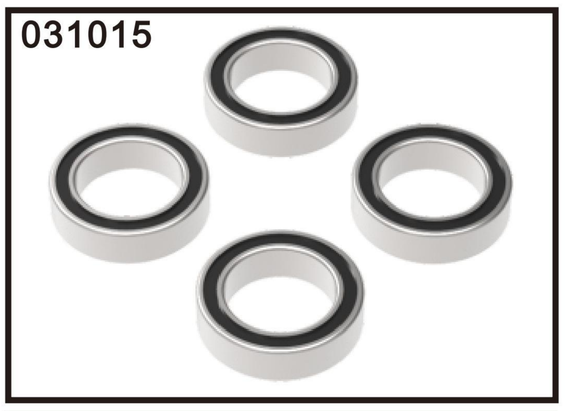

BALL-BEARING 10X15X4

019300

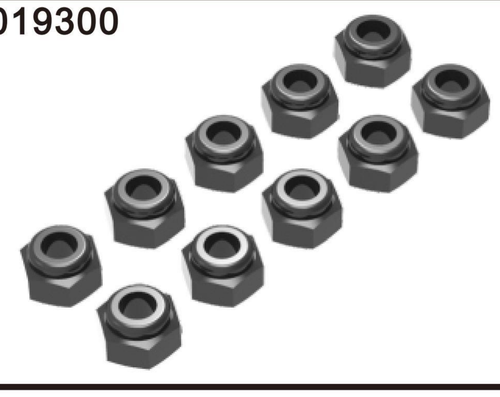

NUT M3

019301

NUT M3 WITH SERRATED FLANGE

019401

NUT M4 WITH SERRATED FLANGE

019402

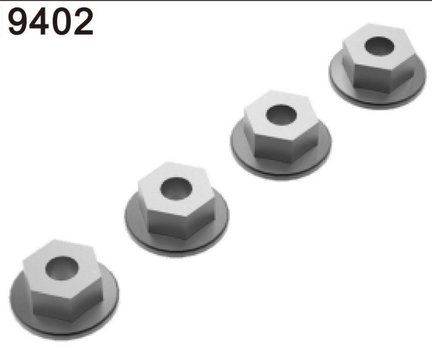

ALU WHEEL LOCK NUT M4

040025 2.5
040040 4.0

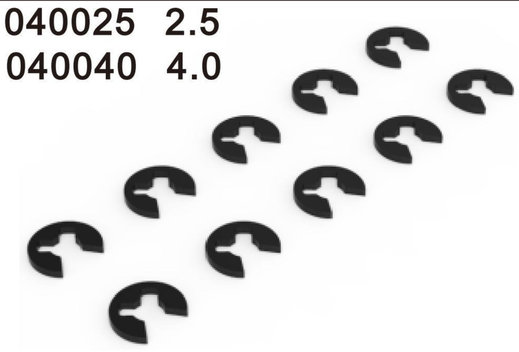

E-CLIP

050209 2*9
050210 2*9.8
050212 2*12
050312 3*12

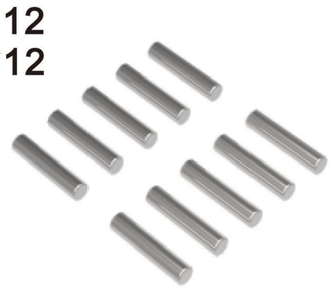

PIN

040373 3*7*0.3
040375 3*7*0.5
043592 3.5*9*0.2
043593 3.5*9*0.3
043594 3.5*9*0.4
045121 5*12*0.1
045122 5*12*0.2
045123 5*12*0.3

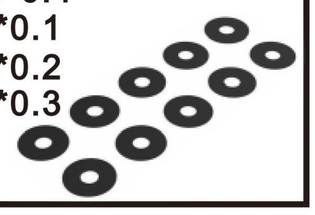

WASHER S

040361 3*6*1
040362 3*6*2
040363 3*6*3
040364 3*6*4
040365 3*6*5
040366 3*6*1.5

ALU WASHER

030102

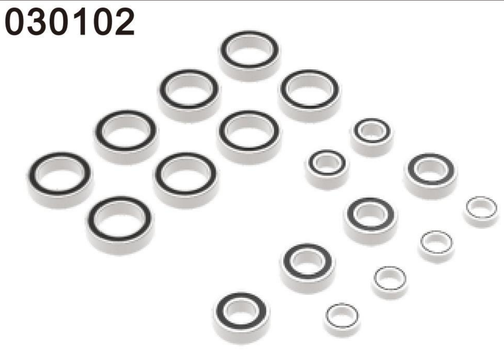

WHOLE VEHICLE BEARING

010102

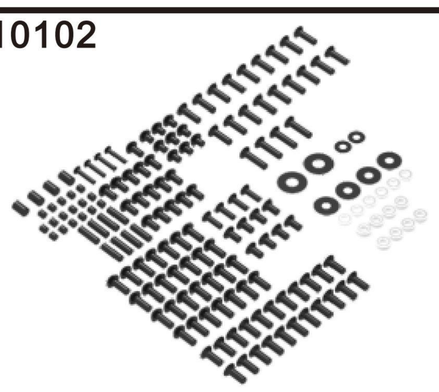

WHOLE CAR SCREW

000100

THE DIFFERENTIAL OIL

000050

SHOCK ABSORBER OIL

009001

GRAPHITE OIL

019502

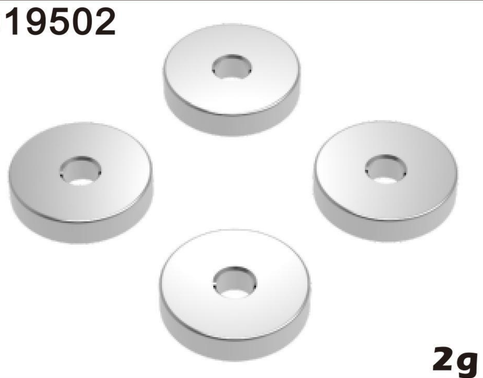

2g

ROUND SHAPE BALANCE WEIGHT

019503

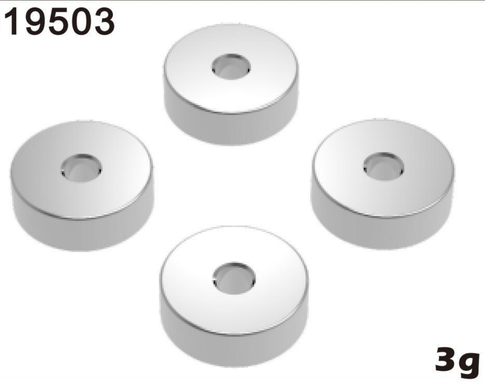

3g

ROUND SHAPE BALANCE WEIGHT

019505

5g

ROUND SHAPE BALANCE WEIGHT

019510

10g

ROUND SHAPE BALANCE WEIGHT

1 /10 Electric FFV2 PRO Car Kit
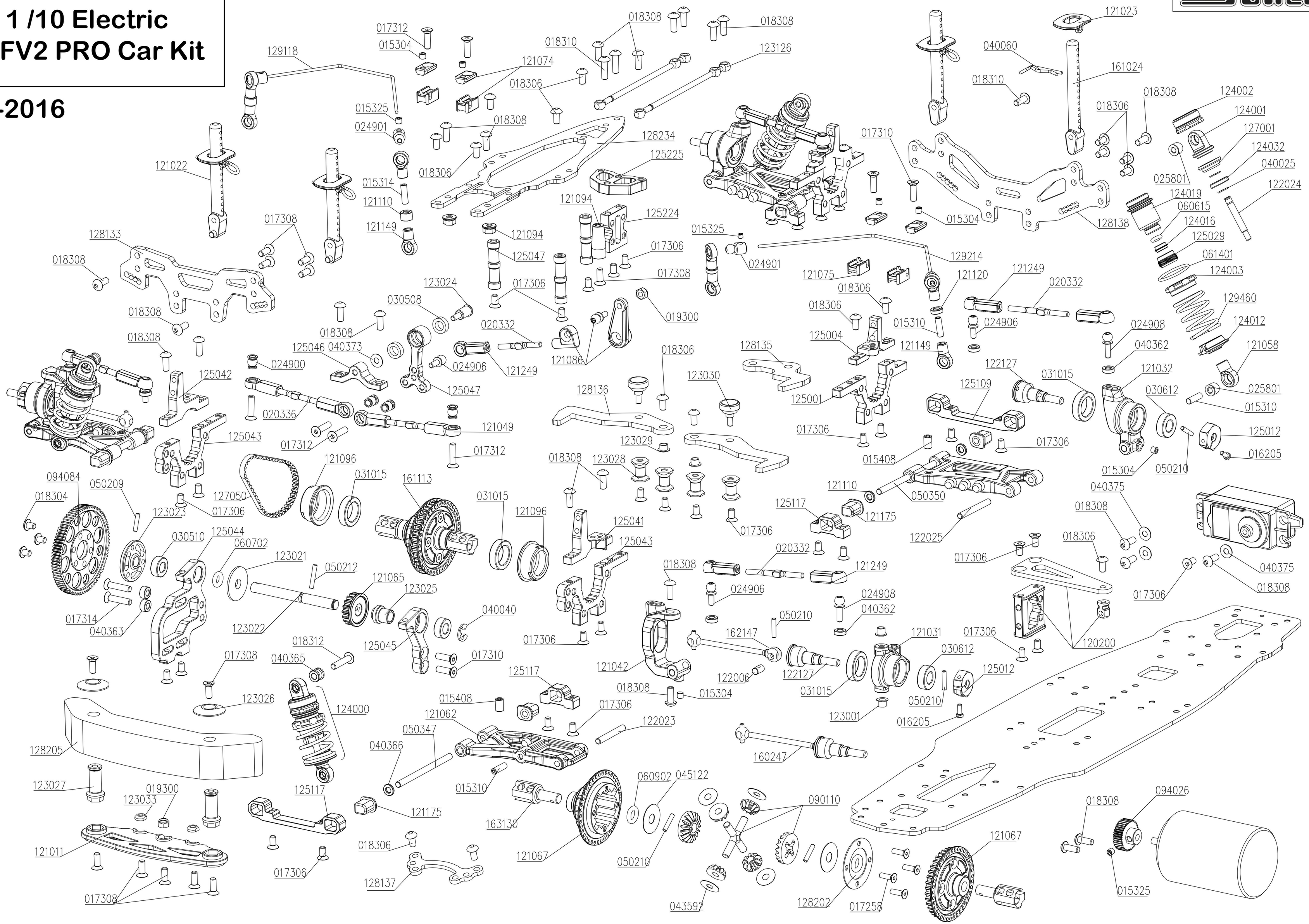
---2016